HP 1090 Series L/M Liquid Chromatographs

Service Handbook

Agilent Technologies

© Copyright Agilent Technologies 2001

All rights reserved. Reproduction, adaption, or translation without prior written permission is prohibited, except as allowed under the copyright laws.

Part No. NONE

07/2001

Printed in Germany

Warranty

The information contained in this document is subject to change without notice.

Agilent Technologies makes no warranty of any kind with regard to this material, including, but not limited to, the implied warranties or merchantability and fitness for a particular purpose.

Agilent Technologies shall not be liable for errors contained herein or for incidental or consequential damages in connection with the furnishing, performance, or use of this material.

Agilent Technologies
Hewlett-Packard-Strasse 8
76337 Waldbronn
Germany

HP 1090 Series L/M Liquid Chromatographs

Service Handbook

In This Book

This manual contains technical reference information about the HP 1090 Series L/M liquid chromatographs (exclusive the diode array detector HP 79883A/HP 1040).

IMPORTANT NOTE

This manual includes all sections from the 01090-90100 edition 3 (08/91). The DAD section (Series II) 01040-90103 (09/94) is available as a separate document/file. The information has been changed slightly. The DAD series I information has been removed (went obsolete for support during 2000). Part numbers have been updated as of 07/2001. Contact your local Agilent support office in case of part number issues or upgrades. An updated version of this manual is available as Adobe Acrobat Reader (PDF) version only.

1 General Information

Using this Manual 20
- Manual Structure 20
- Notes, Cautions, and Warnings 20
- Series I or Series II? 21
- Related Documentation 21

General Repair Information 23
- Repair Policy 23
- Instrument Identification 23
- Service Documentation 23
- Common Abbreviations 24

2 Mainframe

Mainframe Overview 26

Functionality 27
- Solvent Delivery System 27
- DR5 SDS 27
- PV5 SDS 27
- Automatic Injector 27
- Automatic Sampler 27
- Heated Column Compartment 27
- Filter Photometric Detector 28
- Diode Array Detector 28
- User Interface 28

System Operation 30

HP 1090 Series II 35
- First Serial Number 35
- Ternary PV5 35
- New Optical Unit 35
- APG Remote Control 35
- Injector Program for LUSI 35
- Calibration Bracketing for LUSI 36

AminoQuant Method 36
Local/Remote Switching 36
New Color 36

3 System Control

System Overview 38
Functions 38
LC Instrument Control 38
Analysis Management 38
Local Keyboard and Display Control 38
Interface for Remote Connections 38
System States 39
POWER OFF States 39
SELF TEST State 39
FATAL ERROR State 39
PRERUN State 39
INJECT State 39
RUN State 39
BREAK INJECTION State 40
DELAYED START State 40
DIAGNOSTIC State 40
Status Control 41
DANGERS: 41
SERIOUS ERRORS: 41
WARNINGS: 41
COMM ERROR: 41
External Contacts 42
Remote Control 43
RCI + INET 43

4 System Electronics

Mainframe Controller Board (MCO) 46
History 46
CTL 01090-66501 (obsolete) 48
MCO 01090-66532 (obsolete) 48
MCO 01090-66542 49
Firmware on MEM 01090-66503 (obsolete) 49
Firmware on MEM 01090-66573 49
System Keyboard (SYK) 53
GPIB Interface Board (IBU) 56
Board History 56
IBU 01090-66502 (obsolete) 56
IBU 01090-66535 57
Modification 57
Controller Motherboard (CTM) 59
Board History 61
CTM 01090-66500 (obsolete) 61
CTM 01090-66533 (obsolete) 61
CTM 01090-66537 (obsolete) 61
CTM 01090-66557 61
External Contacts Interface Board (ECI) 62
ECI Revision A 62
ECI Revision B 62
Remote Control Interface (RCI) 65
Signal Description 65
Start (I/O) 65
Stop (I/O) 66
Shutdown (I/O) 66
Ready (I/O) 66
Start Request (Input only) 67
Error Connector 67
Switch Block 67
Compatibility 68

5 Local User Interface (LUSI)

Overview 72
Display and Keyboard Controller (DKC) 74
Memory Board (MEM) 78
MEM 01090-66575 (For Series II) 78
MEM 01090-66565 (For Series I) 78
LUSI-INET Interface Board (LIL) 80
Remote Cables 80
Compatibility with Integrators 81
LUSI B Interface Board (LIB) 83
LIB 01090-66529 (For Series I) 83
LIB 01090-66579 (For Series II) 83
Display and Keyboard Interface (DKI) 85
Display Driver and Keyboard (DDK) 88

6 Power Supply

Overview 92
Switch On 93
Voltage Generation 97
AC Voltages 97
DC Voltages 98
Primary Board (PRI) 100
PRI (01090-66525) 100
Power Requirements 100
PWR Line Disturbances 101
Electromagnetic Interferences 101
PRI 01090-66545 (obsolete) 101
PRI 01090-66555 102
Low Power Distribution 109
Power Supply Board (PWS) 112
PWS Revisions 113

Power Supply Control Board (PSC) 116
PSC Revisions 117
Power Supply Mother Board (PSM) 123
Instrument Conversion 125
Line Conversion Procedure 125

7 DR5 Solvent Delivery System
Pumping System 128
Solvent Preparation System 131
Leak Detection System 133
Metering Pump and Rotary Valve 135
Low Pressure Compliance 138
High Pressure Pump 140
Clamp Assembly (Piston Seal) 142
Early Designs 142
Current Design 143
Solvent Ball Valves 145
Override Valve 146
High Pressure Damper 147
Electrical Control 148
Overview 148
Function of SCT Circuit 149
Function of MDR Circuit 149
Function of MCD 149
Communication and Command Lines 149
Metering Channel Driver Board (MCD) 152
Servo Controller Circuit (previously on SCT Board) 152
Quadrature Decoder 153
Actual Position Counter 153
Command Position Register 153
Velocity Detector 153
Adders 154

Pulse Width Modulator 154
Commutator 154
Status Control 155
Motor Driver Circuit (previously on MDR Board) 155
Interface 156
Dual Bridge Amplifier 157
Dynamic Light Switch Control 159
Status Logic 160
Low Pressure Transducer Board (LPT) 162
High Pressure Transducer Board (HPT) 164
MPL Board and RVS Board 165
Pump Stroke Sensor Board (PSS) 167
Solvent Delivery System Motherboard (SDM/SMO) 168
SDM 79835-66511: obsolete 168
SMO (79835-66522) 169
Connections from the SDM/SMO 170
Leak Detection Circuits 171
SDS Leak Sensor 173
Injector Leak Sensor 173
Filter Photometric Detector (FPD) 174
Diode Array Detector (DAD) 174

8 DR5 Procedures

Booster Pump 176
Booster Pump Replacement 176
No compression during/after installation 176
Flow reduction 176
Membrane Replacement 176
Override Valve Adjustment 178
Pressure Measurement 178
Valve Adjustment 179

9 DR5 Diagnostics and Troubleshooting

SDS Diagnostic Cable 182
- Focus of the Test 182
- Preparing the Diagnostic Cable 182
- Assembling the Cable 183

LP Plot Test Procedure 185
- Preparing the Instrument 185
- Running the Test 185
- Examples 187
- Failure Reasons 188

10 PV5 Solvent Delivery System

Overview 190
- Pumping System 190
- Multi-channel Gradient Valve (MCGV) 191
- Mixing and Delay Volume 193

PV5 Electronics 195

CVD Board 197
- Configuration Switch S72 197
- Control Latch 197
- High Current Switch 197
- Hold Current Switch 197
- Coil Status 197
- Coil Sense Circuit 198
- Status Latch 198
- Switching Mechanism of the Coil 198
- Compatibility 204
- Replacing the CVD Board 204
- Replacing the Channel A Electronics 204
- Replacing the Valve 204
- Modifying the CVD Board (79835-66530) 205

11 Manual Injector

Overview 208
Manual-injection Valve Model 7125 209
Manual Micro-injection Valve Model 7413 211
Loop Filler Port Model 7012 212
Electronics 214

12 Automatic Injector, Column Switching Valve and Pre-Column Derivatization

Overview 216
Injection Sequence 218
Injection Steps 218
Column Switching Valve 219
Connections 220
Column Backflushing 220
Column Switching 220
Automated Pre-column Derivatization System (HP79848A) 221
APDS Controller 221
Temperature Setting 221
Remote Control 221
Not Ready 222
Automatic Injector Mechanics 223
Actuator Air Solenoids 224
Automatic Injector Electronics 226
Injector-sampler Driver Board (ISD) 230
Light Switch Monitoring 230
ISD Board 233
ISD Board 01090-66531 (obsolete) 233
ISD Board 01090-66534 (obsolete) 233
ISD Board 01090-66544 233
New Stepper Motors 234

Injector Controller Board (ICO) 237
Repair 237
Procedures - Replacing the Valve Unit Rotor Seal 240
Replacing the Valve Unit Rotor Seal 240
Replacing the Seal 240
Pressure Check 241
Procedures - Replacing Motors 242
Procedures - Sensor Adjustments 243
Adjusting the Valve Unit Sensor Board 243
Adjusting the Swivel Arm Sensor Board 243
Adjusting the Needle Arm Sensor Board 244
Procedures - Installing the Column Switching Valve 245
Installing the Valve 245
Diagnostics and Troubleshooting 248
Step Commands 248
Entering the Diagnose Mode 249
From Pascal ChemStation 249
From MS-DOS ChemStation 249
Example 250
From LUSI 250
Using the Step Commands 251
LED Patterns on ISD 252
Troubleshooting The Column Switching Valve 254

13 Automatic Sampler and Temperature-Controlled Autosampler

Automatic Sampler Overview 256
Theory Of Operation 256
Temperature-controlled Autosampler 256
Operation 256
Environment 257
Automatic Sampler Mechanics 258

Mechanical Assembly 258
Motor Mounting and Alignment Changes 258
Electronics 260
Electrical Control 260
Injector-sampler Driver Board (ISD) 261
Light Switch Monitoring 261
Sampler Light Switches 263
CPS 263
MIP 263
VCS 264
New Stepper Motors 266
Sampler Controller Board (SCO) 268
Procedures 271
Replacing Light Sensors 271
Replacing Motors 271
Diagnostics And Troubleshooting 272

14 Column Compartment (CC)
Overview 276
Column Compartment Mechanics 279
Column Compartment Electronics 280
Interconnections 281
Oven Interface Board (OVI) 282
Compatibility 289
Procedures 290
Replacing the Heater Assembly 290
Replacing the Oven Fan Assembly 290

15 Filter Photometric Detector (FPD)

Overview 294
Optical System 295
Deuterium Lamp 295
First Lens System 296
Filter Wheel 296
Second Lens System And Beam splitter 296
Flow Cell 296
Operation 297
Turn-on and Calibration 297
FPD Mechanics 301
Optical Unit 301
Deuterium Lamp 302
Lens System and Beam Splitter 303
Flow Cell 305
Electronics 306
Diode Assemblies 306
FPD Processor Board (FDP) 307
Analog Digital Analog Interface Board (ADA) 311
16 Bit Analog to Digital Converter 311
18 Bit Digital to Analog Converter (Part II) 311
10 Bit Digital to Analog Converter 312
Input/Output Control 313
Clock Generation 313
Data Storage 313
Voltage Regulation 313
Stepper Motor Driver 313
Leak Detection 313
Deuterium Lamp Power Supply Board (DPS) 317
Lamp Ignition 317
Filter Detector Motherboard (FMB) 323
Procedures 326
Replacing the Photodiode Assemblies 326
Alignment of Filter Wheel 326

Diagnostics and Troubleshooting 328
Error Messages 328
ED10 328
ED11, 12 328
ED13 328
ED15 328
ED20 328
Failure of the system to recognize the presence of the detector 328
ED13 Lamp Ignition Problem 329
Measurement of Lamp Parameters 329
Signal Problems 331
Diagnosis with the DETSIGNAL= Function 331

16 Parts Identification

First Serial Number 333
333

Mainframe (MF) 334
Top Cover Parts 334
Base Parts 337
Inner Mainframe Parts 340
AC- Fan 344
DC- Fan 346
Bottle Holder Assembly 347
Fuses 349
Colors 350
System (SYS) 351
Local User Interface (LUSI) 352
Upgrade LUSI to ChemStation (GPIB) 356
System Conversion 357
Power Supply (PWR) 358
Solvent Delivery System (DR5) 360

Electrical Parts 360
Helium Inlet 361
Helium Outlet 363
Metering Pump and Rotary Valve 365
High Pressure Pump 367
Solvent Flow Path 370
Solvent Delivery System (PV5) 376
Electrical Parts 376
MCGV Parts 377
Channel C2/D External Connections 379
Channel C2 (Series 1 only) 379
Channel C2/D (Series 2 only) 379
Mixer Parts 381
PV5 Solvent Flow Parts 382
Manual Injector (MI) 385
Injector Module 386
RheodyneTM Model 7125 Parts 387
RheodyneTM Model 7413 Parts 388
Automatic Injector (AI) 389
Metering Unit Parts 394
Needle Arm Unit Parts 396
Actuator Bridge Parts 398
Automated Pre-column Derivatization System Parts 399
Automatic Sampler (AS) 400
Temperature-controlled Autosampler (TCAS) 403
Column Compartment (CC) 407
Column Switching Valve 411
Filter Photometric Detector (FPD) 412
Optical Unit 414
Flow Cell 417
FPD Spare Part Kit 418
Cables 419
Signal Cables 419

Remote Cables 421
BCD Cables 427

1

General Information

Using this Manual

Manual Structure

This handbook provides service information for the HP 1090 Series I and Series II Liquid Chromatographs. The structure of this handbook reflects the modularity of the HP 1090 system. This handbook is divided into the following sections:

- General Information
- System Overview and Mainframe
- System Control and Electronics
- Local User Interface (LUSI)
- Power Supply
- DR5 Solvent Delivery System
- PV5 Solvent Delivery System
- Manual Injector
- Automatic Injector and Column Switching Valve
- Automatic Sampler and Temperature-Controlled Autosampler
- Column Compartment
- Filter Photometric Detector
- Parts Identification

Notes, Cautions, and Warnings

NOTE

A note supplies supplementary information which may be helpful or necessary for more understanding of the material.

CAUTION

The “caution sign” denotes a hazard. It calls attention to an operating procedure, practice or the like, which, if not correctly done or adhered to, could result in loss of information (e.g. analytical results) or damage to or destruction of part or all of the equipment. Do not proceed beyond a “caution sign” until the indicated conditions are fully understood and met.

WARNING

The “warning sign” denotes a hazard. It calls attention to a procedure, practice or the like, which, if not correctly done or adhered to, could result in injury or loss of life. Do not proceed beyond a “warning sign “until the indicated conditions are fully understood and met.

Series I or Series II?

Throughout this handbook, HP 1090 refers to both Series I and Series II instruments. For example, *“the metering pump of the HP 1090 is a dual-piston pump “*. Where information applies specifically to only one of the 1090 series, then the series is written in full. For example, “*the Remote Control Interface (RCI) is installed in all HP 090 Series II instruments*“.

Related Documentation

The following documentation is currently available for the HP 1090 and related products.

NOTE

The below mentioned manuals are not available as printed version any more. The latest version is available as Acrobat Reader (PDF) file from the Agilent support website only.

Table 1 **Service Handbooks**

HP 1090 Series I/Series II Service Handbook	this manual	PDF
HP 79883A/HP 1040 DAD Service Handbook	separate document	PDF

Table 2

Guide Books/Reference Manuals
HP 1040 DAD Guide Books
HP 1090 Series II Guide Books

Table 3

Operator's Handbooks
HP 1090L Series II Instruction Kit
ChemStation (DOS Series) Instruction Kit (1050 + 1090 2D versions)
Chemstation Instruction Kit (standard soft ware)
Chemstation Instruction Kit (foreground/background software)

General Repair Information

Repair Policy

WARNING

Always disconnect the power cable from the HP 1090 when working on the Primary Board (see“Power Supply” on page 91), Oven Interface Board (see “Column Compartment (CC)” on page 275), or any item that is connected to line power.

CAUTION

Many of the boards in the HP 1090 are loaded with static-sensitive devices. Always use a grounding kit to ensure adequate grounding. When using a grounding kit, the power cable must be connected to the HP 1090. This ensures a good ground connection.

Major mechanical and electrical assemblies of the HP 1090 are repaired on an **exchange** basis. These parts are identified in the parts identification section with two numbers, e.g. 01090-66553/-69533. The 01090-69533 would be the exchange part.

All other items are repaired at board or component level.

Instrument Identification

Each instrument is identified by a unique 10-digit serial number located on the inside left wall of the column compartment. The serial number consists of four digits followed by a letter and five digits.

The same serial number system is used for the modules which are installed in the 1090 (SDS, sampler, injector, column compartment, detector). Typically, the serial number prefix of modules built into a 1090 system do not always match.

Service Documentation

Changes to the instrument design which affect the service organization will be documented in service notes. Service notes are distributed to service personnel at or before the time of implementation of the change. Where relevant, information covered in service notes will be incorporated into the service handbook at the next revision.

Common Abbreviations

Table 4 Common Abbreviations

AC	Alternating Current
A/D	Analog to Digital Converter
APG	Analytical Products Group
AU	Absorbance Unit
mAU	Milliabsorbance Unit
CAB	Cables
D/A	Digital to Analog Converter
DAD	Diode Array Detector
DC	Direct Current
FPD	Filter Photometric Detector
GPIB	General Purpose Interface Bus
HPLC	High-Performance Liquid Chromatography
HPIL	Hewlett-Packard Interface Loop
INET	Instrument Network
LUSI	Local User Interface
LUSI B	LUSI with GPIB communication
LUSI INET	LUSI with Instrumental Network (HPIL)
LC	Liquid Chromatograph
SDS	Solvent Delivery System

2

Mainframe

Mainframe Overview

The HP 1090 mainframe can basically be divided into two sections. The lower part, which contains Power Supply, Main Fan, System Keyboard and Solvent Delivery System (SDS), and the upper part where Heated Column Compartment, Automatic Injector, Automatic Sampler and Detector are installed. Access to the modules and their installation is easy, since the top cover can be removed by removing only four screws.

The number of modules present in each single instrument is dependent on customer needs. However at least the Power Supply and the Main F an located in the lower rear part of the mainframe and the System Keyboard, at the right hand front, are present.

The SDS, located in the lower front part can consist of either isocratic, binary or ternary equipment. The isocratic configuration includes a Metering Pump, a Low Pressure Compliance, a High Pressure Pump, a High Pressure Damper and one or two electronic circuit boards.

The Automatic Injector is installed in the upper left hand rear, and the Automatic Sampler is mounted onto the Injector frame.

The Heated Column Compartment is mounted on the upper front part, allowing easy access for column installation.

Any installed Detector is on the upper right hand part to assure short capillary connections between Detector and Column Compartment.

The User Interface is connected with an GPIB cable to the rear of the HP 1090 mainframe and can be located next to the HP 1090 according to customer bench configuration.

Functionality

Solvent Delivery System

The Solvent Delivery System (SDS) delivers flow rates from 1 µl/min up to 5 ml/min per channel by true volumetric displacement. This permits 1%-99% gradients.

DR5 SDS

The DR5-SDS has fast response for high-speed gradients and low delay volume for micro bore gradients. Each solvent channel has a Metering Pump that takes the solvent in from a reservoir and meters it into the Low Pressure Compliance which acts as the mixing chamber. With the High Pressure Pump, a high frequency membrane pump, pressures up to 400 bar are generated and flow is delivered to the system via a High Pressure Damper. Flow ripple is removed and system pressure is measured in this item.

PV5 SDS

The PV5-SDS flow system consists of one Metering Pump and one Multi Channel Gradient Valve (MCGV) with up to four channels (three internal and one external channel). The Metering Pump meters the solvent via the Low Pressure Compliance to the High Pressure Pump and the Damper. Flow ripples are removed with a static mixer connected to the damper.

With the HP 1090 Series II Quaternary PV5 option, any combination of binary, ternary or quaternary gradients can be run.

Automatic Injector

The Automatic Injector (AI) can be programmed to inject volumes from 0.5 µl up to 250 µl (250 µl syringe required). During the injection cycle flow from the SDS is bypassed to the injection system by the use of a Rotary Valve Unit. A sample loop is loaded with the amount of sample programmed. Switching the Valve Unit again brings the sample onto the column.

Automatic Sampler

The Automatic Sampler (AS), combined with the Automatic Injector, allows fully automated injection from up to 100 bottles. Access is random and analyses can be run in any sequence and with any method.

With the Temperature-Controlled Autosampler option, samples can be maintained in a cooled environment. Cooling is performed by an external cooling bath (not supplied by HP).

Heated Column Compartment

The Heated Column Compartment (CC) ensures temperature homogeneity in the column by pre-heating the solvent in a 2 µl capillary and by heating the surrounding air in the compartment at the same time. The heat exchanger maintains a temperature precision of ± 0.5°C around setpoint in a range from 20°C above ambient to 100°C.

Filter Photometric Detector

The Filter-Photometric Detector (FPD) allows programmable wavelength switching. A filter wheel gives a choice of 7 wavelengths per analysis from 200 to 540 nm. Switching time is under 2 seconds with no offset. Detector response time can be set to three different values. Lamp current of the Deuterium Lamp can be selected high or low. Two analog outputs, each with a range of 0 V to 1 V (0.5 V/AU) with a offset of 0 or 50 mV (switched on ADA board), and 0 V to 100 mV are available. The integrator output has high resolution. For recorder output a low resolution is used. In addition this output is programmable in % offset and attenuation (only FPD).

Diode Array Detector

The Diode Array Detector (DAD) measures absorbance in a wavelength range of 190 to 600 nm. The HP 79883A (Series II built-in DAD) has a selection of flow cells and slits for optimization of analytical conditions. Details of operation can be obtained from the Operating Manual.

User Interface

As user interface, the Local User Interface (LUSI) or ChemStation (Pascal or MS-DOS) is suitable for any system configuration. It gives the user a single communications point for all modules. GPIB is the communications link to LC hardware and computer peripherals.

Figure 1 **System Modules**

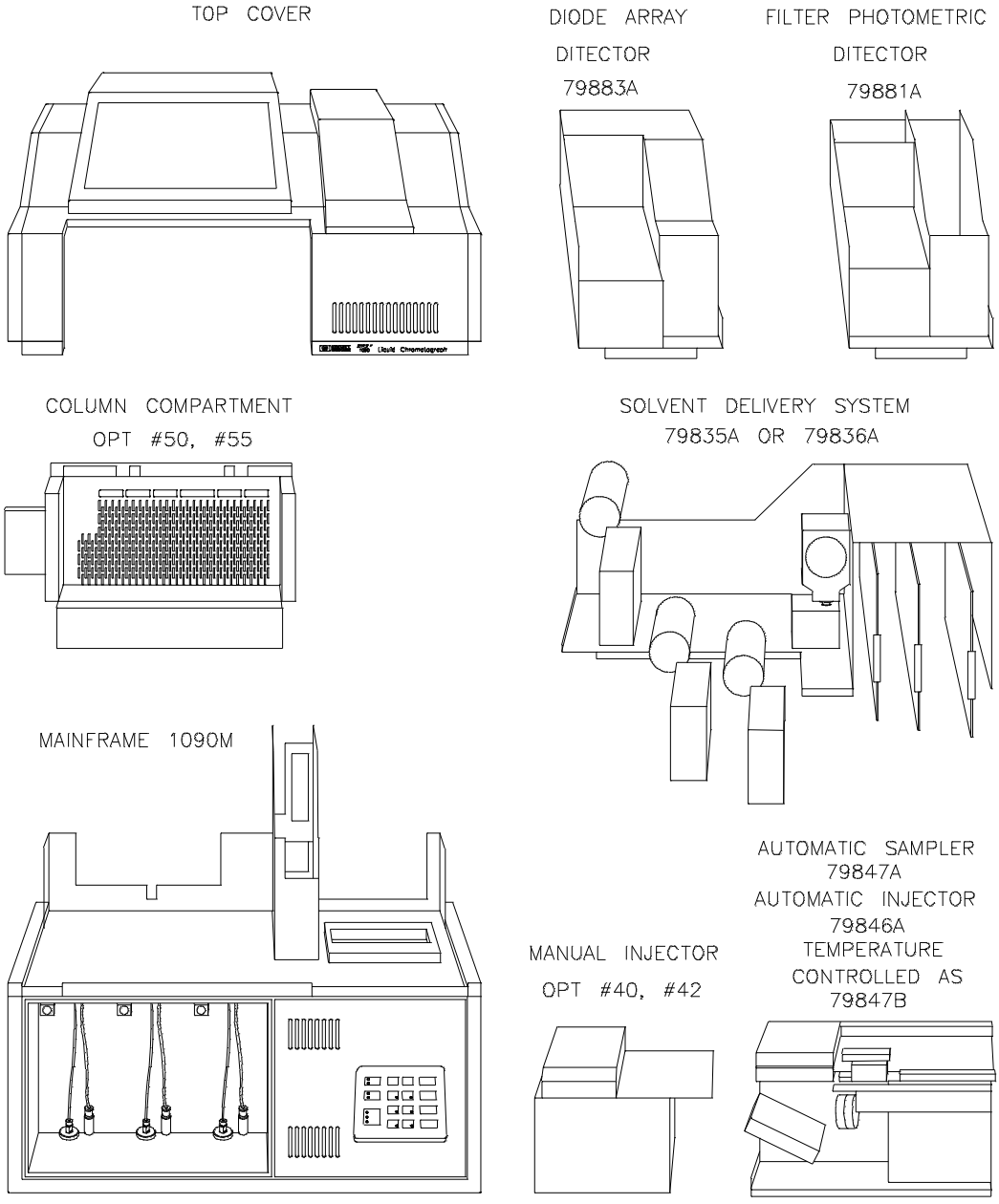

System Operation

Operation of all LC modules integrated into the HP 1090 mainframe is observed and monitored by a two-processor system located on the Mainframe Controller Board (MCO). Almost all modules are connected to the controller via an interface or driver board which is connected to the I/O Bus. Only some few items get a single control signal from an I/O port or provide a status signal directly to an I/O port or an analog signal to a circuit on the MCO.

The operator interacts with the HP 1090 via the user interface (LUSI or ChemStation) which is displaying status and actual values. Also, the user interface sends set-points and commands to the LC. Connection to the I/O Bus is made by the GPIB Interface Board (IBU) which matches the GPIB protocol to the I/O Bus (LUSI does this internally). Status and Error signals are also displayed on the System Keyboard at the front of the LC. In addition, POWER, PUMP and DETECTOR can be switched ON and OFF manually. The analysis can be started and stopped with push buttons from the keyboard.

The Solvent Delivery System (SDS) consists of two pumps (isocratic configuration), a Metering Pump and a High-Pressure Pump, which are coupled together in line. The Metering Pump System takes solvent in from a reservoir and meters it into the Low Pressure Compliance (LPC). The LPC acts as a mixing chamber and serves as a temporary storage device for solvents of each functioning channel during the time where the High Pressure Pump delivers flow to the system and no solvent can go into its cavity. Two stepper motors are required to drive the Metering Pump; the one to move the two piston pumps (servo motor) and the other to turn a Rotary Valve (valve motor). Actual movement of the servo motor is sensed by a shaft encoder and compared with set-points provided by the controller on the Motor Channel Driver Board (MCD).

The resulting error signal is combined with additional information from the controller on the Motor Channel Driver Board (MCD) where an according signal for the servo motor is generated. The valve switching motor is also controlled by the MCD, whereby feedback on proper execution is provided by limit switches and sent to the controller via a circuit on the MCD. The pressure in the Low Pressure Compliance is sensed and an electrical signal is provided by the Low Pressure Transducer (LPT) and sent to the controller.

The High Pressure Pump delivers the solvent to the column. Operation is started and synchronized with a pulse from the controller to the Primary Board (PRI) where the pump motor is connected to line power. An interrupt signal for further use on the MCO is derived by a Pump Stroke Signal Board (PSS) that senses the movement of the pump motor. This signal is also used to synchronize switching of the DR5 Metering Pumps with the pressure stroke of the High Pressure Pump. Flow on the high pressure side is damped in the High Pressure Damper and the pressure is measured at the same time with the High Pressure Transducer. This signal is also sent to the controller.

A Manual Valve Injector can be used to place the sample onto the column. Moving the valve to the inject position provides a start pulse to the controller. No other signals are required for operation.

The Automatic Injector uses the Injector Sampler Driver Board (ISD) to interface with the controller. Signals to drive valves and stepper motors are connected through the Injector Control Board (ICO). All sensed positions and states are fed to the ISD also through the ICO.

The Automatic Sampler is controlled in exactly the same way as described for the Automatic Injector. Even the driver board (ISD) is the same. Functions of the Sampler Control Board (SCO) are the same as for the ICO, however the hardware design is different.

Oven fan, oven heater and associated sensors, responsible for temperature control of the Heated Column Compartment are connected to the controller via the Oven Interface Board (OVI).

Four external contacts, each individually programmable as either a contact closure or as switching 24 V, are located on the External Contacts Interface Board (ECI). 24 V or contact closure is selected by switches on the ECI. Switching of the contacts (open/close or 24 V on/off) are controlled directly from the respective I/O ports on the MCO.

Two remote connectors (HP 1090 Series II only!) are located on the rear panel. These connectors provide start, stop, not-ready, shutdown, prepare-run, and power-on signals. The remote lines are input/output and are decoupled for EMC. The shutdown line is set by hardware in case of a leak or CPU hang-up.

For built-in detectors (DAD, FPD), there is only a minimum number of connections to the controller. For the Filter Detector, only some Status and Error signals are transferred. Data manipulations on the detector signal are made in the detector processor itself. Chromatographic signals are available at the detector outputs.

Figure 2 **Block Diagram**

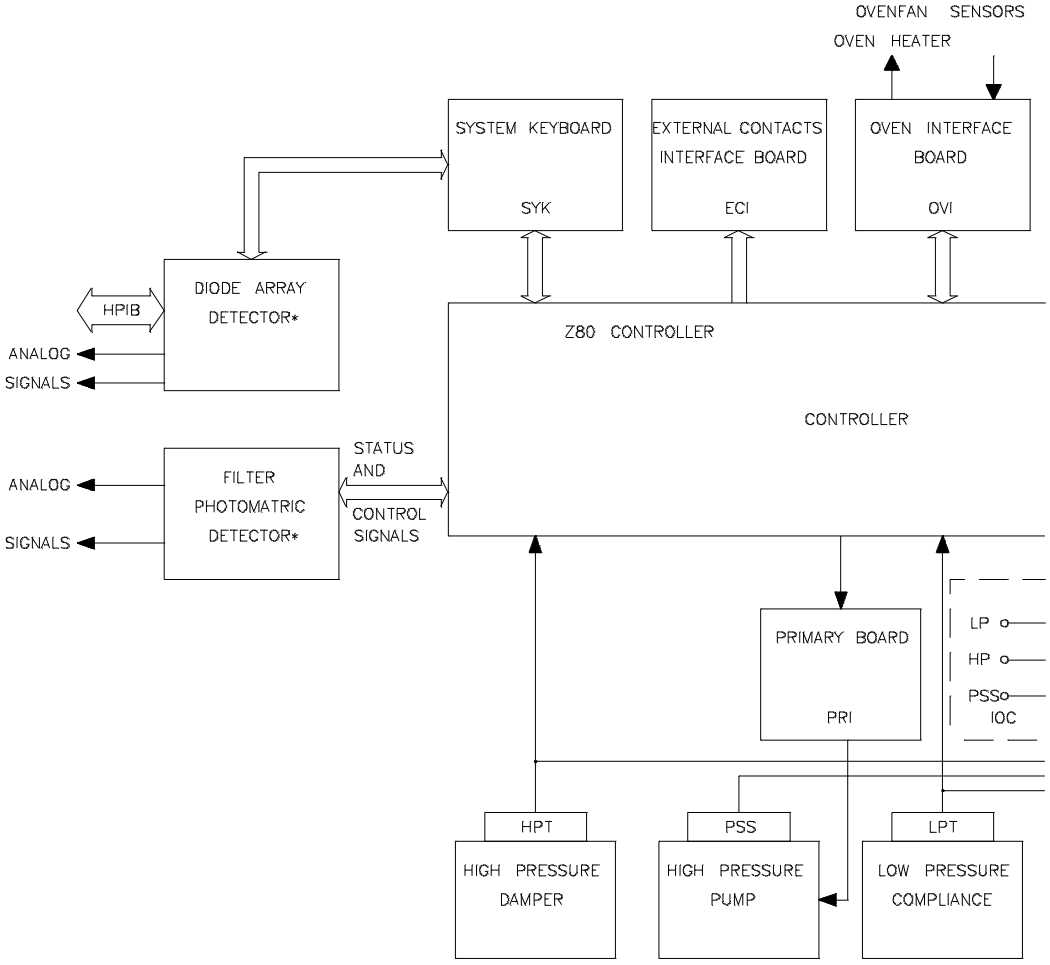

Figure 3 Block Diagram

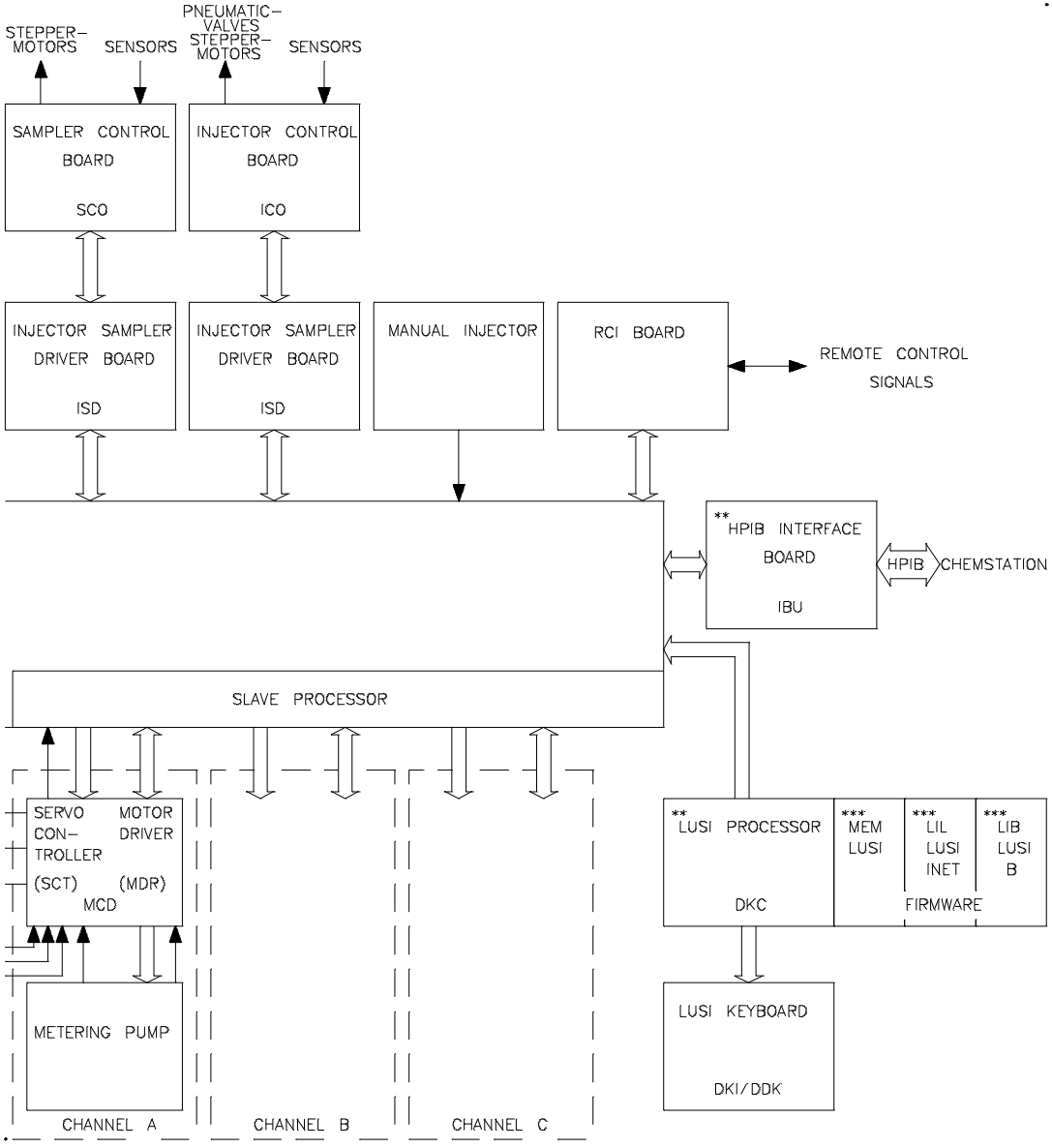

The Diode Array Detector transfers status messages via a single cable to the System keyboard. It also uses this connection to be turned ON or OFF. Data transfer to mass storage devices uses the GPIB connection to LUSI-B or ChemStation. Two analog signals are generated in the detector module and are available at the detector rear panel.

HP 1090 Series II

The HP 1090 Series II was introduced in May, 1990.

First Serial Number

The first serial number was **3015G03281**.

The major new features of the Series II instruments are:

- Quaternary PV5 capability
- New DAD Optical Unit
- APG Remote Control
- Injector Program for LUSI
- Calibration Bracketing for LUSI
- AminoQuant method in Method 9 (LUSI only)
- Local/remote switching from LUSI keyboard
- New Color

Ternary PV5

The ternary PV5 option enables any binary or ternary combination of gradients, and a true quaternary gradient to be run. The fourth channel is an external channel which connects directly to the MCGV and Helium supply inside the HP 1090.

New Optical Unit

A major design change was made to the optical unit for Series II instruments (HP 1090 and HP 1040). The Series II optical unit has a choice of two stainless steel flow cells (6 mm, 10 mm) and three interchangeable slits (2, 4, 8 nm). The interchangeable slits and flow cells enable better optimization of analytical conditions.

APG Remote Control

All HP 1090 Series II instruments (not LUSI INET) have the APG (Analytical Products Group standard) remote control capability. The APG remote has both inputs and outputs (start, stop, not ready, error, start request) which enable the 1090 to act as either master or slave. Two APG remote connectors are available which are connected in parallel.

Injector Program for LUSI

The injector program of the HP 1090 Series II LUSI (not LUSI INET) can be used for sample and reagent preparation, addition of internal standards, dilution etc. This enables much more flexibility and better control of sample preparation and analysis. The injector program is fully programmable from the LUSI keyboard.

Calibration Bracketing for LUSI

Calibration bracketing enables periodic injections from one or more calibration vials, providing precise quantization throughout the sequence.

AminoQuant Method

An AminoQuant method is stored permanently in ROM in method position 9 (LUSI only).

Local/Remote Switching

During boot-up, the 1090L Series II can be switched between local and remote modes from the LUSI keyboard. In the local mode, instrument control is done from the local (LUSI) keyboard. In remote mode, an external controller provides the user interface (e.g. Pascal or MSDOS ChemStation).

NOTE The LIB Board must have firmware revision E for local/remote switching of the 1090 Series II with MSDOS ChemStation.

New Color

All Series II instruments have the new Dove Gray and Parchment White colors, see “Colors” on page 350.

3

System Control

System Overview

Functions

The local control and communication system for the HP 1090 Family of Integrated Modules implements the electronic hardware and firmware for the following functions:

- LC Instrument Control
- Management for One Analysis
- Local Keyboard and Display Control
- Interface for Remote Connections

The major part of the Controller is contained on the Mainframe Controller Board in the HP 1090 mainframe. Control is based upon a Z80A processor with 48 Kilobytes of ROM and 8 Kilobytes of RAM.

The GPIB Interface Board (IBU) plugs into a slot within the HP 1090 mainframe. It contains specific communication electronics and additional 4 Kilobytes for specific firmware. The Controller (LUSI, ChemStation) serves as the user interface and for sequence management to the HP 1090.

LC Instrument Control

This includes control of the Solvent Delivery Stem (SDS), the Automatic Injector, the Automatic Sampler, the Heated Column Compartment and the Filter-Photometric Detector. Control is accomplished through a dedicated communication between controller and front end electronics. LC parameters are processed for instrument monitoring during normal operation as well as for diagnostic procedures execution during troubleshooting.

Analysis Management

This includes the execution of one analysis: bottle selection, injection, time-programmed events and stopping the run.

Local Keyboard and Display Control

Detected ERRORS and NOT READY conditions are displayed at the keyboard. POWER, PUMP and DETECTOR can be switched ON and OFF manually. Also the analysis can be started and stopped.

Interface for Remote Connections

The interface is designed such that the user interface (LUSI-B, ChemStation) has full access to the controller and can act as the operator terminal. Remote Start/Stop signals as well as a status input signal from external devices (Ready for Start) is provided. In addition, the HP 1090 Series II has Start (I/O), Stop (I/O), Ready (I/O), Shutdown (I/O) and Start Request (Input only) via the Remote Control Interface (RCI).

System States

POWER OFF States

Entered with the line power switch set to ON or from PRERUN state pressing the POWER OFF key at the keyboard or sending a secondary command from the user interface. In this state parts of the power supply are active. The LED in the POWER OFF key is ON.

SELF TEST State

Entered on the transit from POWER OFF to PRERUN. This state is only temporary and will be left according to the test done in this state. Only a RAM test is performed.

FATAL ERROR State

Entered from SELF TEST state when the RAM test failed. This state can only be left with the line power switch set to OFF.

PRERUN State

Entered from SELF TEST state automatically if the system is ready to operate. It can also be entered from RUN state with the STOP command, when the run time is elapsed, or when a STOP signal appears on the RCI Stop input (Series 2 only).

Some serious system errors will bring the HP 1090 into PRERUN state too. Aborting an injection as well as leaving the DIAGNOSTIC state will result in the PRERUN state. The LED in the POWER ON key will be lit. In this state the instrument accepts all instructions in order to establish an analysis or a sequence. Flow system can be turned ON and flow can be established. All measurements and online hardware-monitoring is active.

INJECT State

Entered with a START command, or through a sequence start command, or by a START signal appearing on the RCI Start Request input (Series 2 only). All NOT READY messages must be all OFF.

SDS parameters are controlled as in PRERUN state. Actions for the injection cycle are executed. The INJ/BREAK LED is ON.

RUN State

Entered automatically if the injection cycle was successful. It can also be activated by a Start signal on the RCI Start input (Series 2 only). The injection cycle is not executed.

Control functions are the same as in PRERUN state except the following additional functions: run clock is active and time table will be executed. The RUN LED is ON.

BREAK INJECTION State

Entered with a remote BREAK instruction, with a STOP command or by an open top cover during the INJECT state. As soon as the current action has been finished or has been brought into a safe position, the injection sequence is interrupted.

Control functions are the same as in PRERUN state. The INJ/BREAK LED is blinking. This state can be left with the remote RESUME command or with the START key to resume the injection. To abort the injection, the remote command ABORT has to be sent or the STOP key has to be pressed.

DELAYED START State

Entered if an automatic start run must be executed and the actual parameters are not the same as the measured and controlled parameters. This state is left as soon as the actual parameters are identical to the set-points.

DIAGNOSTIC State

Some special service functions are available in this state. Single step operation for the injector, sampler, and detector is possible. The diagnostic state is terminated by the STOP command.

Figure 4 **Diagnostic States**

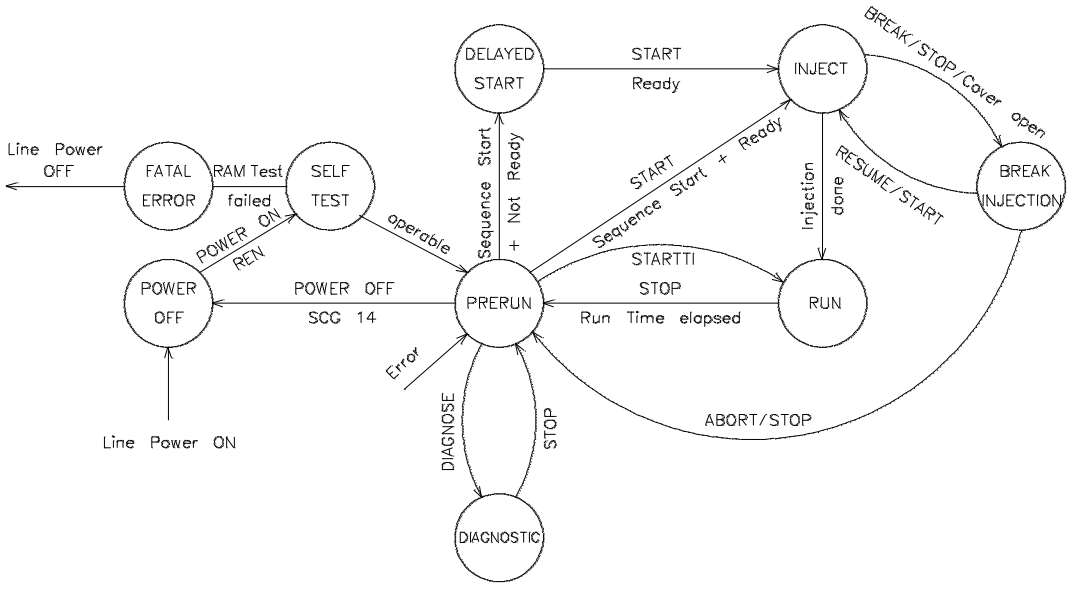

Status Control

The instrument monitoring system permanently observes each of the fault conditions. If a certain fault condition is met the respective fault status is set true. Some malfunctions also alter the system status. All faults recognized by the instrument-control and fault-monitoring systems are indicated by three LEDs located on the system keyboard. They are labelled with NOT READY, ERROR and COMM ERROR (for LUSI: NOT READY, ERROR). They further result in an event message available on the local display. A NOT READY or ERROR/COMM ERROR condition causes the corresponding remote output on the RCI (Series 2 only). In addition, inputs via the RCI may generate the appropriate system status (e.g. NOT READY, ERROR).

The faults are classified as:

DANGERS: Events during the operation which require the operation of the whole instrument or one of the modules (e.g. leaks) to be aborted.

SERIOUS ERRORS: Usually an intervention of the operator is required (e.g. valve switching error).

WARNINGS: Faults where the instrument has a chance to recover by itself (e.g. flow not ready) or which lead to a limited operation of the instrument.

COMM ERROR: Malfunction of the remote communication line (e.g. invalid secondary GPIB command).

Detailed descriptions of ERROR messages can be obtained from the respective section of the *Reference Manual* or *Series 2 Guide Books*.

External Contacts

The external contacts interface board (ECI) is mounted on the rear panel of the HP 1090, next to the power receptacle. Four contacts provide either +24 VDC or a contact closure, and are accessible from the rear of the HP 1090.

Control signals from the MCO control the status of the coils on the ECI. Depending on the status of the signals, the respective coils close their contacts. The status (ON or OFF) of the contacts can be time-programmed in the method time table.

The contacts can be used for controlling an external device such as a detector (e.g. HP 1047A RI Detector). Also, the ECI board is used to provide the 24 VDC supply for the fan of the Temperature-Controlled Auto Sampler (TCAS).

Material for connecting external devices is supplied with the standard accessory kit.

Remote Control

NOTE The remote control interface (RCI) is installed in HP 1090 Series II instruments only.

The Remote Control Interface allows easy connection between single instruments or systems to ensure coordinated analyses with simple coupling requirements.

Two remote connectors are provided at the rear panel of the HP 1090 Series II. These connectors provide Start, Stop, Not-Ready, Shutdown, and Start Request signals. The remote lines are decoupled for EMC. The shutdown line is set by hardware if a leak should occur or if the CPU should hang up.

The two remote connectors are of the subminiature D-type, and provide both inputs and outputs (wired-or technique).

An error contact closure is provided. When an error occurs, the contact closes for 500 ms. Also, a beeper provides an audible signal. The beeper can be switched on and off by switch 8 on the switch block.

RCI + INET

For the introduction of the HP 1090 Series II, there were no changes made to the firmware of the INET board (LIL). This means that the firmware is unable to interpret the signals coming from the RCI board. Although the RCI is installed in 1090L with INET instruments, the RCI board cannot be used (see also Local User Interface section).

NOTE In 1090L with INET, do not connect any cables to the RCI board. Otherwise, system hang-ups may occur.

4

System Electronics

Mainframe Controller Board (MCO)

History

Originally, the HP 1090 Series I mainframe controller was the CTL board (now obsolete). In early 1985, this board was replaced by the MCO/MEM board assembly which consisted of two boards: the MCO board and the MEM board. At the introduction of the HP 1090 Series II, the MCO was replaced by a new version (addition of a connector for the RCI board). The new MCO is fully backwards compatible.

Functions Controller hardware is located on the MCO board. Heart of the controller is the Z80A processor. An internal processor bus system consisting of Control Bus, 16 bit Address Bus and 8 bit Data Bus connects all functional groups on this board. Connection to the HP 1090 I/O Bus is made with unidirectional drivers for Control Bus and Address Bus and a bidirectional driver for Data Bus. The program is stored permanently in ROMs (MEM board) whereas data are stored temporarily in RAMs. A Power-ON Detection Circuit presets all circuits to a defined state during power-up to assure correct operation. A Clock Generation Circuit provides all frequencies for use on this board and throughout the mainframe. Operation of the controller is checked with a Watch Dog circuit. From this circuit, a System O.K. signal is available that indicates proper function of the processor. In case of a malfunction it prevents damage in the respective item resulting from wrong information being written into the front-end circuitry. With a request applied to the interrupt logic, the Z80A executes a program to satisfy the interrupt besides its normal tasks.

The control of the SDS is mainly accomplished by a cooperation of the Z80A and the 8041A slave processors. A bus system exclusively providing information to the SDS is leading from the slave through drivers and control logic to the SDS electronics. The Z80A provides data to the slave depending upon signals received from the SDS through the HP 1090 I/O Bus.

Six analog signals are converted into digital by an A/D Converter with selectable resolution after being multiplexed. The digital signal is measured with the Z80A CTC. An output latch provides resolution signals for the A/D Converter, selects signals for the multiplexer and the following signals for use in the HP 1090 mainframe: a GTS signal for the power supply and a PUMP ON for the High Pressure Pump. Two relays provide Remote Start and Remote Stop signals. Either one is a contact closure for 500 ms. The Oven Control Section provides output signals to the items in the Heated Column Compartment and receives sensed signals back.

A section called 8 Addressable Bits provides signals for four external contacts and four LEDs located on the board.

Oven Control and A/D Converter require a more detailed explanation. Signals for Column Compartment Heating and Cooling have Driver Circuits (FON, CVO) on the board.

Oven heater switching requires a synchronization with zero cross over pulses (ZCP HEA TER). From an I/O port the processor presets the A input, resulting the HON signal. Oven temperature signal is amplified before it is applied to one of the six inputs of the multiplexer.

A circuit within the A/D converter provides a constant voltage for use in the Oven Temperature Circuit and the A/D Converter on the one hand and it gives a temperature-dependent signal on the other hand which is applied to an input of the multiplexer after amplification and inversion. Four more inputs are covered with the High Pressure signal (HP), the Low Pressure signal (LP), –12V and GND respectively. Multiplexer inputs are protected with diodes. Multiplexer Control is with three select input signals obtained from the output latch.

The A/D Conversion is accomplished with a voltage to frequency converter. The buffered input signal is integrated. A comparator switches when the integrated signal exceeds a certain level and triggers a counter. They will switch two electronic switches and a constant current source discharges a capacitor at a constant rate. After this capacitor is discharged, the procedure starts again. The signal, generated in the above described way, is then counted over a time of 20 ms. The score of the counter then represents the result of the conversion.

The A/D Conversion is synchronized with the Pump Stroke signal (PSS) of the High Pressure pump to assure reproducible and defined times of measurements. Each cycle is 100 ms long. Three measurement periods of 20 ms each are made in the way shown in Figure 5 on page 47.

Figure 5 **Pressure Measurement**

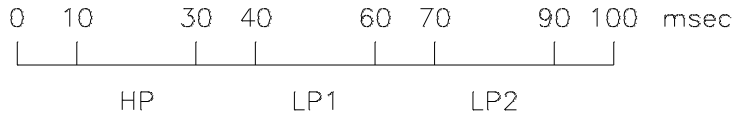

High Pressure (HP) and Low Pressure 1 (LP1) are measured in every cycle. Low Pressure 2 (LP2) measurement is replaced one time per second by the Temperature measurement (TEMP), which means every 10th conversion cycle has the signals HP, LP1, TEMP. With the same procedure, two GND measurements are performed, however, only one time in 10 seconds.

Different resolutions are used for the conversion. For the Oven Temperature and Temperature Offset signals high resolution is used. The input range of 0 V to –8V is converted into 1.875 kHz to 46.875 kHz respectively. For all other input signals low resolution is used. This means that the input voltage range is converted into 0.5 kHz to 12.5 kHz. The Offset signals are actually GND measurements, however with different resolution. High resolution is used for temperature, low resolution for pressure. These measurements are used for correction of the sensed signals.

High Pressure and Oven Temperature are displayed in the appropriate screen depending on the user interface.

The pressure readings may also be display ed for the SDS troubleshooting.

A connector on the MCO provides the connection to the Remote Control Interface (RCI) board (Series II only).

Board History

CTL 01090-66501 (obsolete)

- CTL is NOT compatible with LUSI or ChemStation.
- CTL does not offer MINPRESS function.
- CTL's battery for memory protection not used.
- CTL will allow the system to operate if the electrical output of either LPC or damper is disconnected. In this case, the numbers (HP or LP) will float at some meaningless but legal value.
- EF22 and EF23 are not implemented.
- If a particular SDS channel fails during operation, the CTL will print the appropriate message, then that lost percentage of flow to one of the remaining available channels. A channel not programmed by the user begins operating by itself.
- CTL will allow the system to operate if the SDS leak sensor is disconnected. At first, EF21 will be set. If the sensor is left disconnected and the pump is again started, the processor will assume that an override is requested and EF21 will be ignored.

MCO 01090-66532 (obsolete)

- Not compatible with the 1090 Series II.

- MCO/MEM is compatible with all user interfaces (NOT Series II).
- EF22 and EF23 are implemented.
- EF21 cannot be overwritten.
- In the event of channel failure the processor will not automatically call a dormant channel operation.

MCO 01090-66542

- Required for 1090 Series II.
- Addition of connector for RCI.
- Fully backward compatible with Series I instruments.
- MCO/MEM is compatible with all user interfaces.
- MEM firmware revision must be Rev. D or later for use with Series II instruments.

Firmware on MEM 01090-66503 (obsolete)

- Rev. A does not have MINPRESS function and causes EF21 to be set in some HP 1090s. This problem has nothing to do with the leak sensor or MDR board, it is caused by a firmware bug.
- Rev. B fixes EF21 problem and implemented MINPRESS function.
- The MAXFLOW@ function is inoperable and the SDS cannot perform a gradient using the B and C channels (firmware problem).
- Rev. C overcomes bugs of Rev. B (not gradient bug).
- Rev. A, B, C not compatible with Series II instruments.
- Rev. D fixes B/C gradient bug.
- Rev. D or later required for Series II operation.
- Rev. D or later fully backward compatible.

Firmware on MEM 01090-66573

- Rev. E is less sensitive for the occurrence of EF03, EF10/12/16/24 event/error messages. The messages will be treated differently. See SN 01090-128. Prefix change 3329G04821.

Figure 6 **Block Diagram Mainframe Controller**

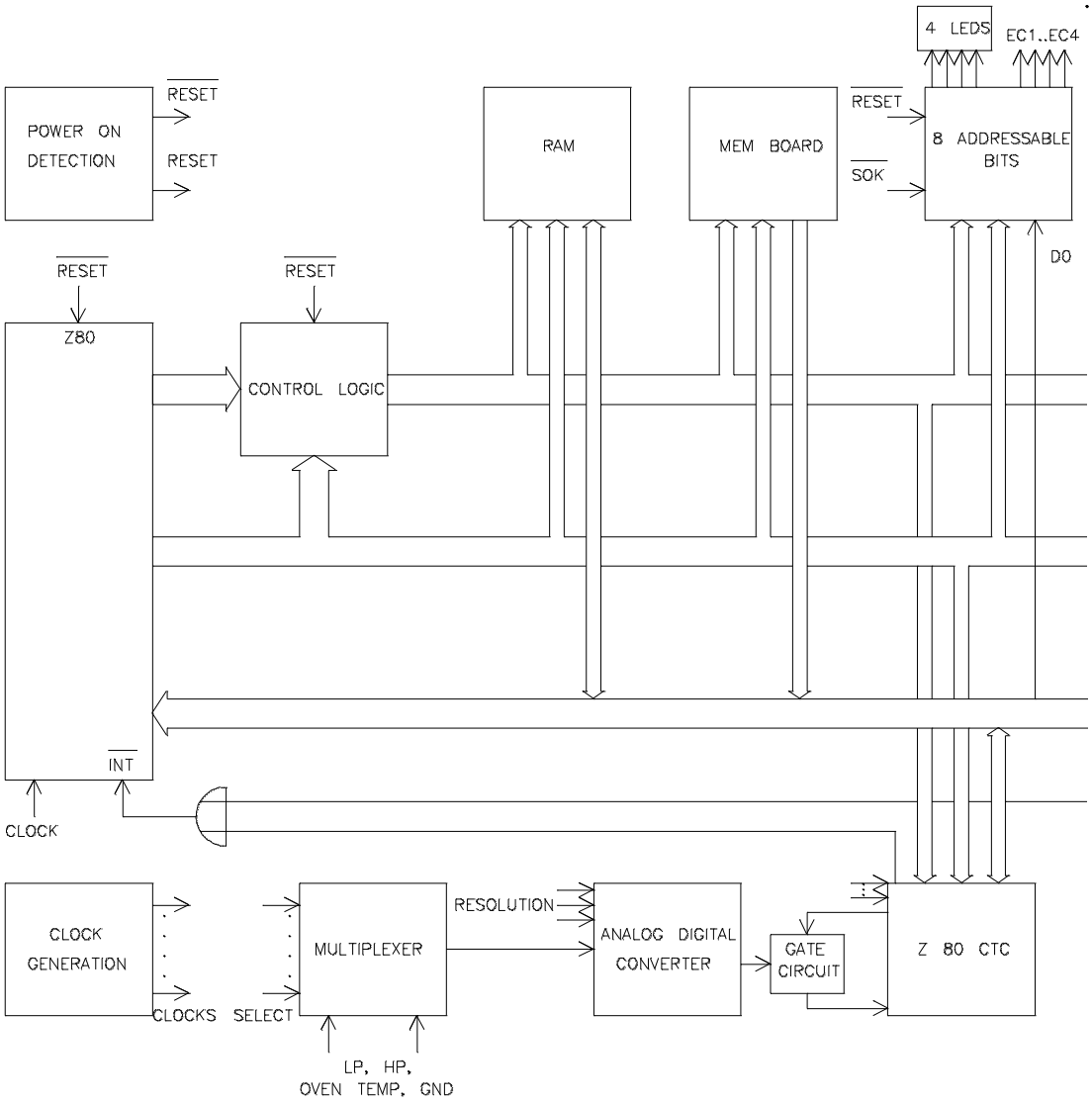

Figure 7 Board Layout Mainframe Controller

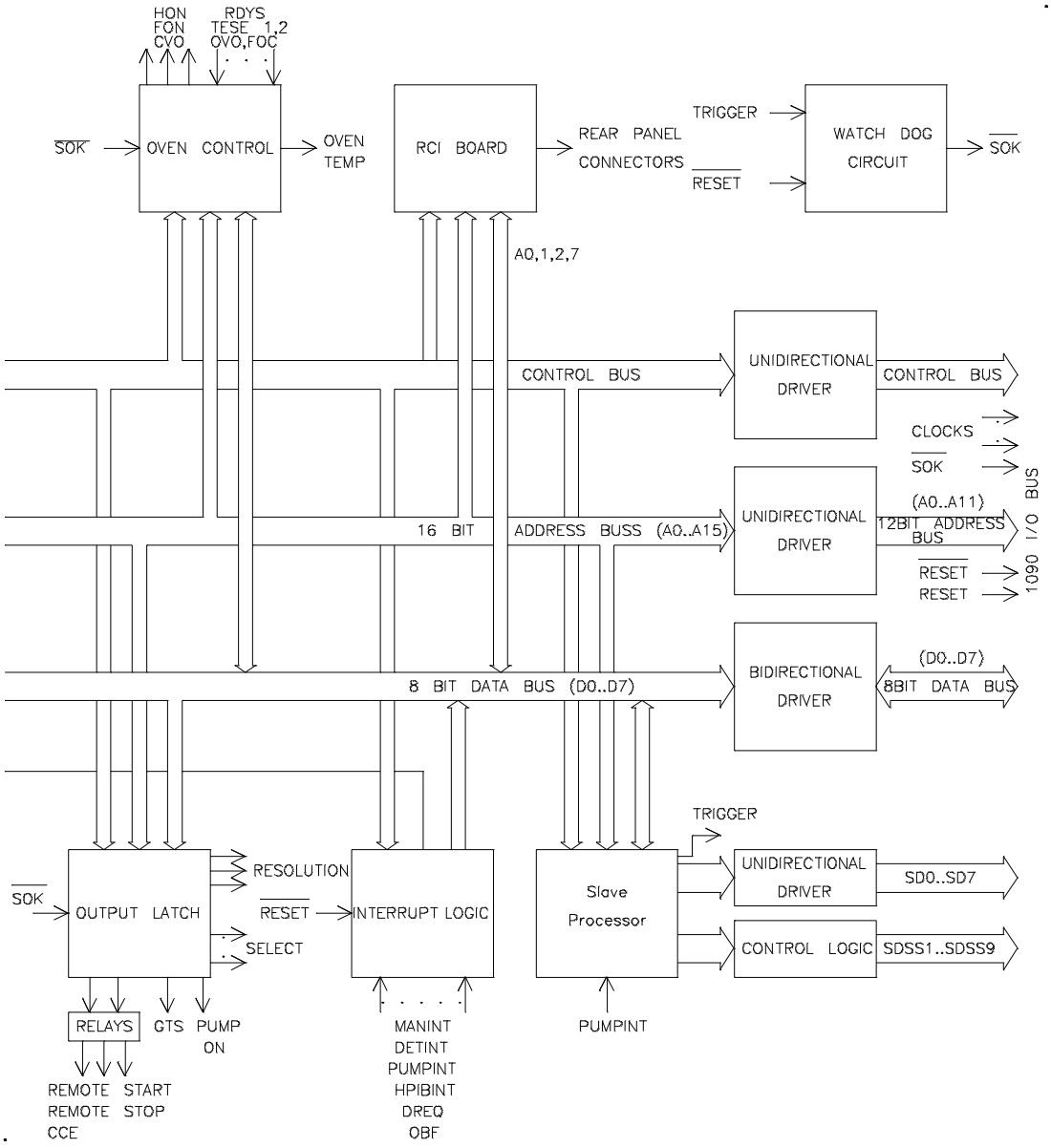

Figure 8 **Board Layout Mainframe Controller**

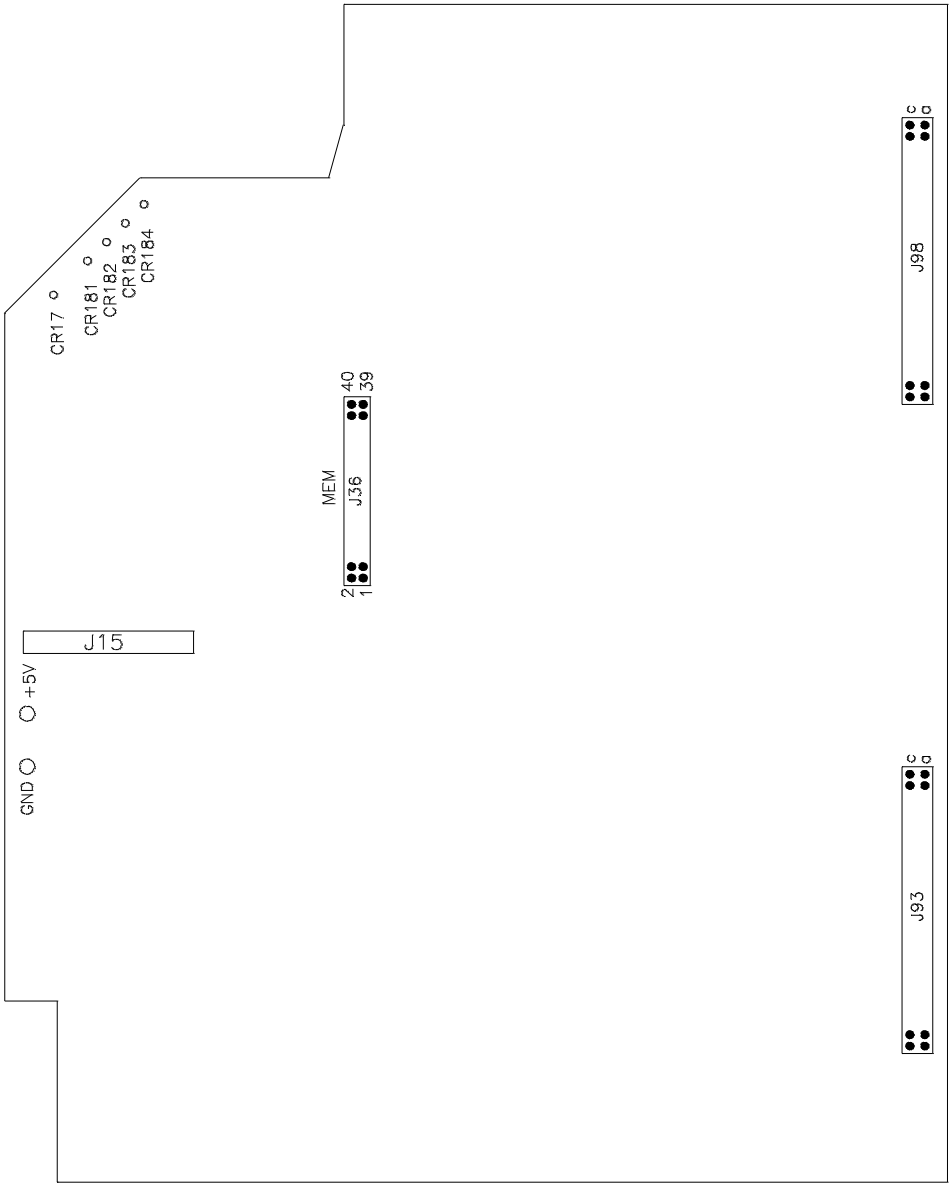

System Keyboard (SYK)

- SYK 01090-66527 is for Series I instruments is obsolete.
- SYK 01090-66552 is for use with Series I/II instruments.

The System Keyboard (SYK), physically located on the right hand lower corner of the HP 1090 front, provides two functions. First, it allows turning ON and OFF major parts of the system, such as: POWER, PUMP, DETECTOR and ANAL YSIS. Second it indicates the status of all integrated modules with LEDs. All switching functions are also programmable from the user interface (ChemStation).

The system keyboard is connected to the HP 1090 I/O Bus. LEDs indicating system status are on a separate board connected to the SYK with a short cable. This LED board is mounted on the SYK with spacers. LEDs indicating ON-OFF status of POWER, PUMP and DETECTOR are located inside the push buttons. Pushing any of the buttons provides a high to the input lines of U21, except the POWER ON. This switch provides a low to the PSC board to start up the power supply. POWER ON, +5VB, +5V A and GND use J54 to be connected to the power supply via the controller motherboard (CTM). F or operation of an integrated DAD in the HP 1090 a cable connection is provided from J63 SYK to J4 of the communications and miscellaneous processor board (COM) to control the detector related LEDs directly without using the HP 1090 controller. A grounding connection is made with a cable from the SYK to the HP 1090 chassis to prevent static loading.

Figure 9 **Block Diagram System Keyboard**

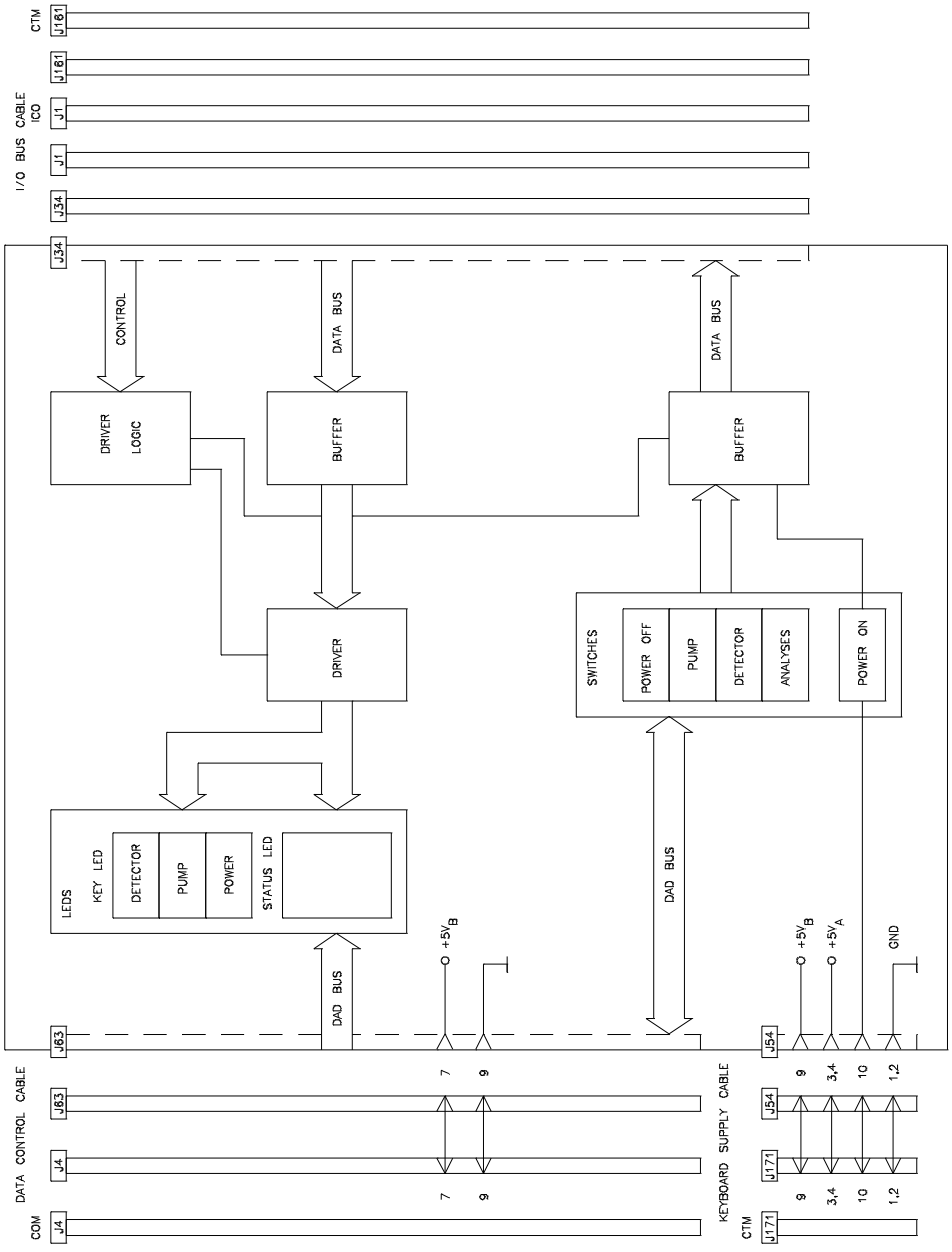

Figure 10 **Board Layout System Keyboard**

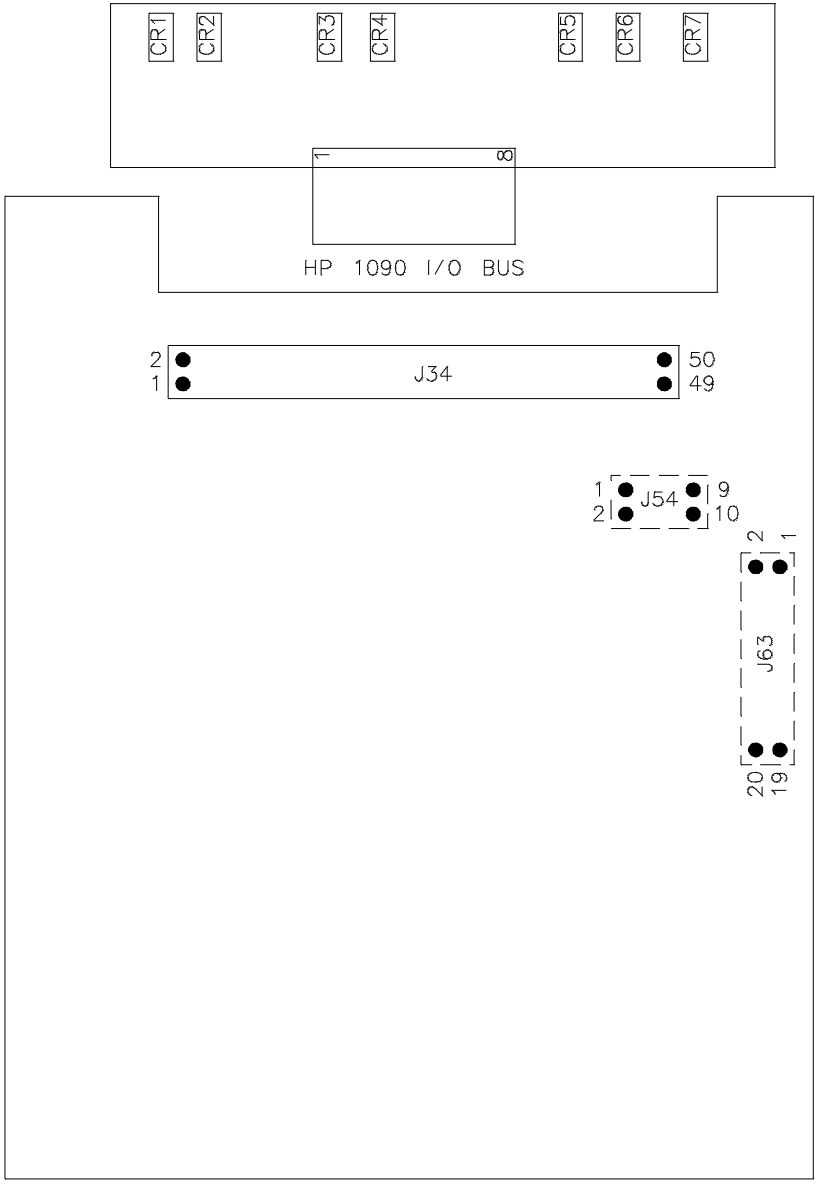

GPIB Interface Board (IBU)

NOTE

The original IBU board was 01090-66502 and contained a ROM (01090-13012) in the U62 socket. Due to a change in the mainframe controller, this ROM was removed, giving the IBU a new part number, 01090-66535 (see “Board History” on page 56 and “Compatibility” on page 68).

The GPIB Interface provides the link age between the user interface (LUSI or ChemStation) and the controller of the HP 1090. It matches the GPIB protocol with the HP 1090 I/O Bus structure. Data transfer is accomplished with an 8 bit data word and an 8 bit control word. Status and command signals for the HP 1090 are transferred, however no chromatographic data.

The GPIB cable from the user interface is connected to a plug at the rear of the HP 1090 mainframe. This plug is mounted on the GPIB Interface Assembly, from where a flat 26 pin ribbon cable leads to J21 of the IBU.

Interface hardware on the IBU is represented by bus drivers with bidirectional driver capability. Data connections on the GPIB side are bidirectional, control signals are both, uni- and bidirectional. One chip matches the control and data bus from either side. Another chip contains special firmware to control the GPIB interface. One chip is a bi-directional driver for the data bus on the HP 1090 I/O Bus side. The address set by switch S122 is buffered.

The Remote Enable line (REN) bypasses the interface circuitry on the IBU and is connected directly to J81 from where it goes to the Power Supply Control Board (PSC). For details of how to work with the REN line, refer to section Power Supply Control Board (PSC).

Board History

IBU 01090-66502 (obsolete)

- Rev. A: GTS signal is not routed through to Power Supply. This revision can be used with CTM Rev. A or B only. Rev. A can be changed to Rev. B using the modification procedure described below.
- Rev. B: GTS signal is now routed through. This revision has to be used with CTM Rev. C or later.

IBU 01090-66535

- Compatible with CTL or MCO/MEM.
- One EPROM is removed.

Modification

To make IBU Boards Rev. A compatible for use with Rev. C CTM boards make a connection on the IBU between pins 18c and 25c and also a connection between pins 19a and 20a of connector J81.

Figure 11 **Block Diagram IBU**

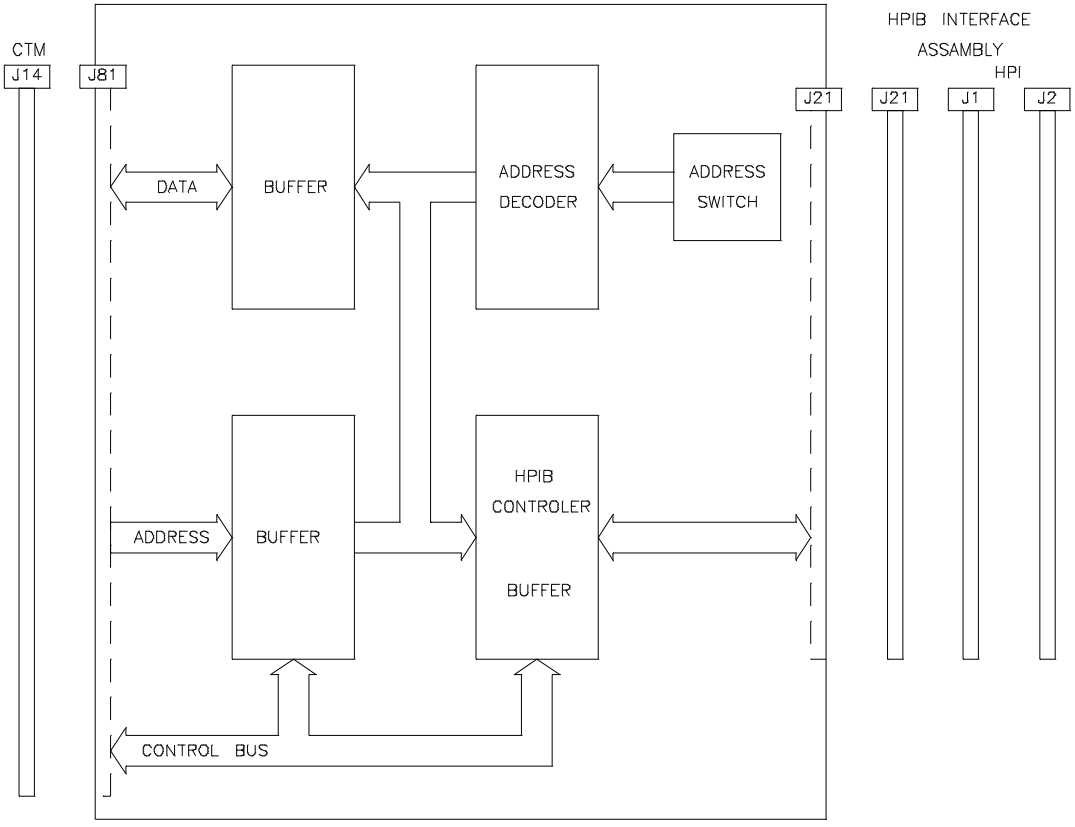

Figure 12 **Board Layout IBU**

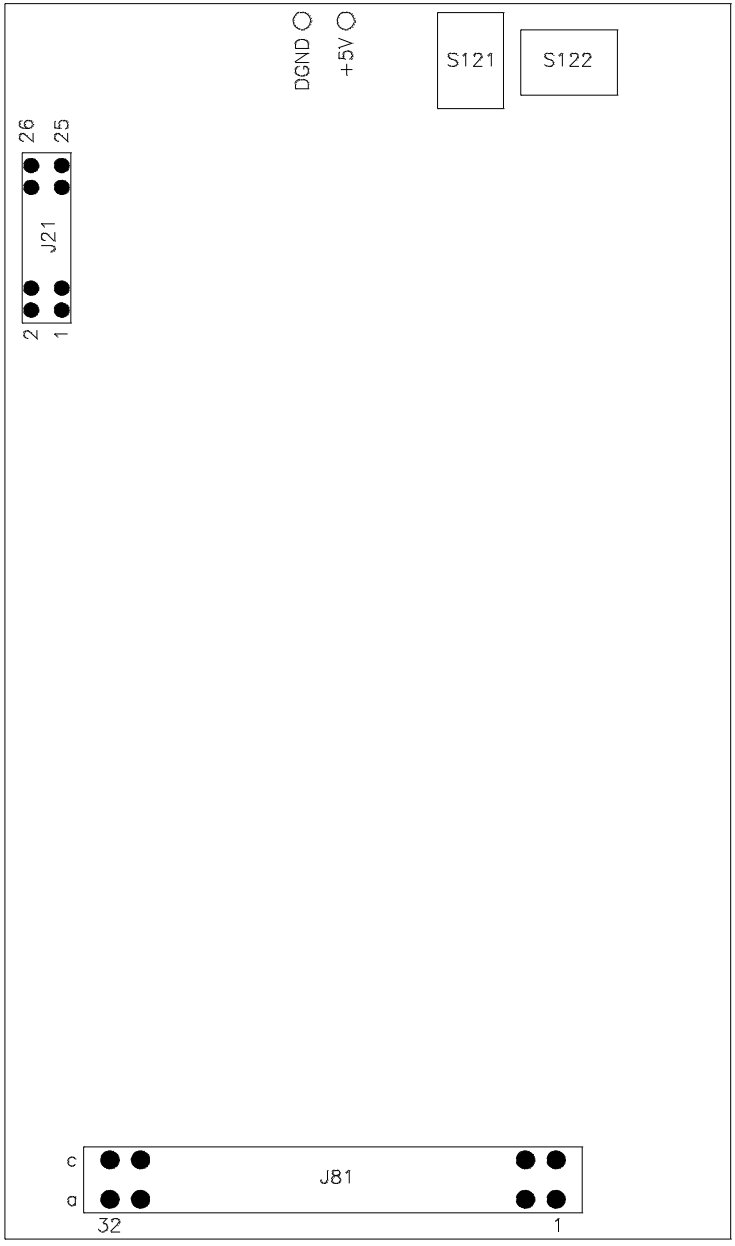

Controller Motherboard (CTM)

The following boards plug onto the CTM:

Table 5 **Boards connecting to the CTM**

Board	Connectors
Mainframe Controller Board (CTL/MCO)	J23, J26
GPIB Interface Board (IBU/DKC)	J14
Injector Sampler Driver Board (ISD)	J33, J36

Connections are made from the CTM to:

Table 6 **Connections from the CTM**

From CTM to:	Connector
Power Supply Motherboard (PSM)	J12, J32
Solvent Delivery System Motherboard (SDM)	J13
Solvent Delivery System Connector board (IOC) and System Keyboard (SYK)	J161, J171
Detector Motherboard	J162
Oven Interface Board (OVI)	J15
Injector Control Board (ICO)	J451
Sampler Control Board (SCO)	J43
Manual Injector	J452

Figure 13 **Interconnection CTM board**

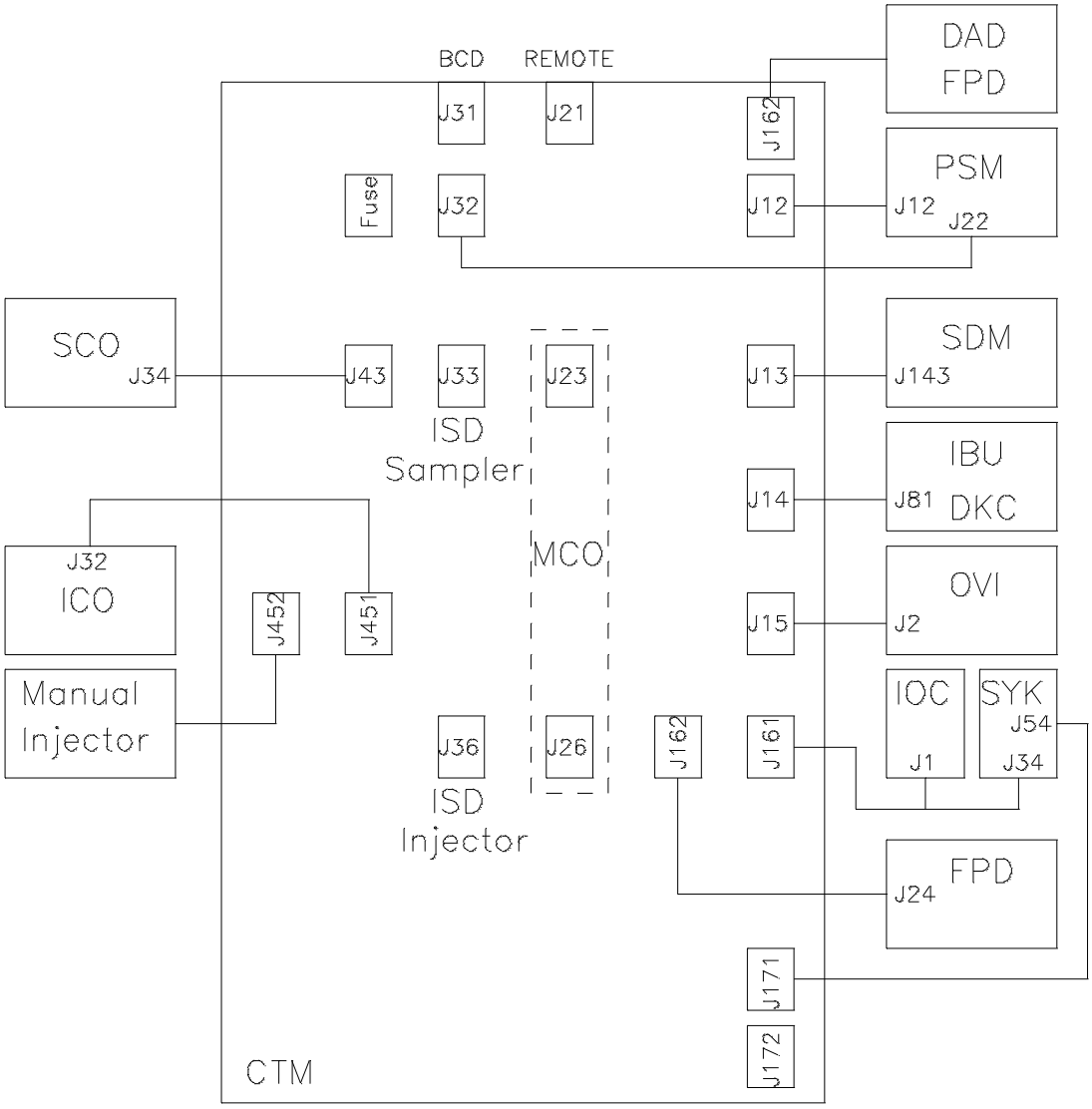

Board History

CTM 01090-66500 (obsolete)

- Was the original version and had three revisions.
- Before the implementation of a fuse it was relatively easy to short out the injector light switches during a repair (especially the BIP sensor). Since these switches are powered by +5VA, additional damage was often the result.
- In a ChemStation based HP 1090 system, blowing of the fuse F1 (3 A, 2110-0003) will cause the injector/auto sampler to be paralyzed. On the System Keyboard the power off LED will be lit when the rear switch is turned on, as usual. When the power on key is pressed, the SDS and DAD will initialize, but the System Keyboard will remain dark except for the power off LED. The SYK is completely dead; even the power off key is inoperable.
- In a LUSI system, the injector/sampler is also paralyzed. However, the LUSI display is not dark because it receives it's power from another source.

CTM 01090-66533 (obsolete)

- W as introduced because CTM Rev. C was not directly backward compatible due to the IBU revisions.
- Compatible with LUSI.

CTM 01090-66537 (obsolete)

- Rev. A had a design change which adds a new connector labelled "Ready for Start" for the use with future options (e.g. the Micro Oven HP 79848A).
- Rev. B was introduced for the 1090 Series II. The fuse on the CTM is located in a fuse holder which can be accessed from the rear of the instrument. This revision is fully backward compatible.

CTM 01090-66557

- Rev. Due to changes in the environmental regulations the old Controller Motherboard 01090-66537 does not pass the RFI test any longer.

External Contacts Interface Board (ECI)

ECI Revision A

Four external contacts are available. J1 - J3 provide +24 VDC. J4 provides a contact closure. The +24 VDC contacts are fused with F1, 0.5 A, the contact closure is fused with F2, 0.2 A.

ECI Revision B

Since October, 1988, all instruments are fitted with revision B ECI Board.

Four external contacts are available. All four contacts can provide either +24 VDC or a contact closure. +24 VDC or contact closure is set for each contact by slider switches on the ECI board which are accessible after removing the rear panel. The factory default settings are J1 - J3 +24 VDC, J4 contact closure. All contacts are fused with a 0.2 A, 250 V fuse.

Setting the Slider Switch

On the ECI circuit board are two labels: CCL (contact closure) and PWS (power; +24 VDC). Slide the switch for each connector towards the appropriate setting.

NOTE

In the standard accessory kit, are labels which indicate the setting of each connector. If you change the configuration of the connectors, stick a label over the connector to indicate the current setting.

Rating (Revisions A and B)

The specified rating for the +24 VDC sources is 0.1 A maximum. For the contact closure specified rating is 100 VDC maximum, current of 0.1A maximum.

Control Signals

Depending upon the status of the input signals EC4 through EC1 the respective coils close their contacts. Switching is synchronized with the zero cross over pulse (ZCP).

Figure 14 on page 63 shows boards, connectors and pin connections where the control signals run. Four control signals EC4 through EC1 are generated from the controller on the MCO board. They are transferred from the CTM to the PSM. There the ZCP signal, generated on the PSC is added and then the five signals are connected to the ECI.

Figure 14 **Interconnection ECI board**

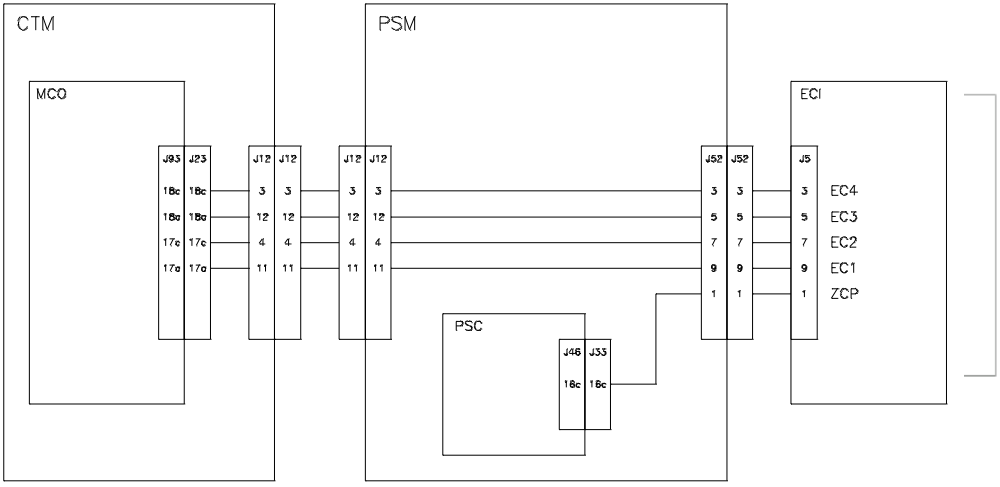

Figure 15 **Board Layout ECI board**

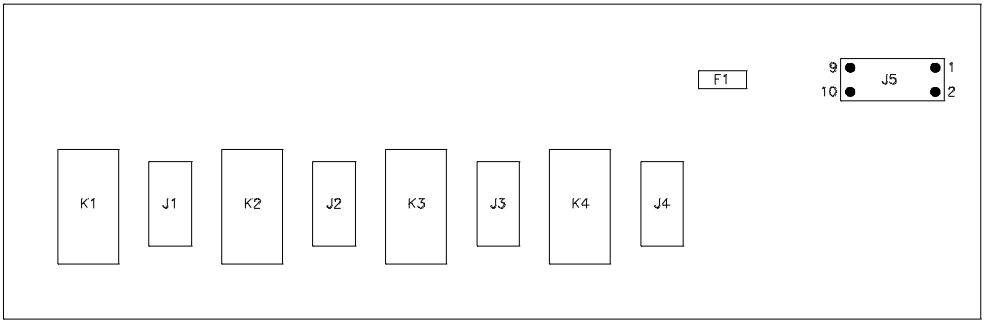

Figure 16 **Block diagram ECI board Revision A**

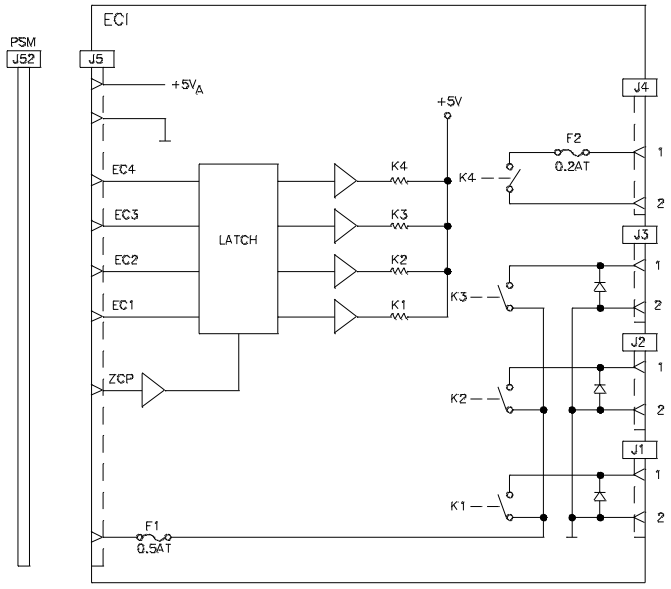

Figure 17 **Block diagram ECI board Revision B**

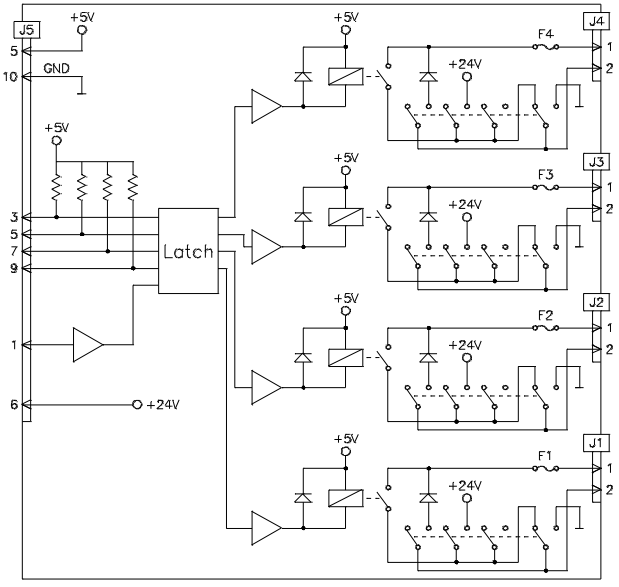

Remote Control Interface (RCI)

NOTE The RCI Board is installed in all HP 1090 Series II instruments. However, the RCI is not functional in the 1090L Series II with INET (see “Remote Control” in Chapter 5).

Figure 18 **RCI Connector and Block Diagram**

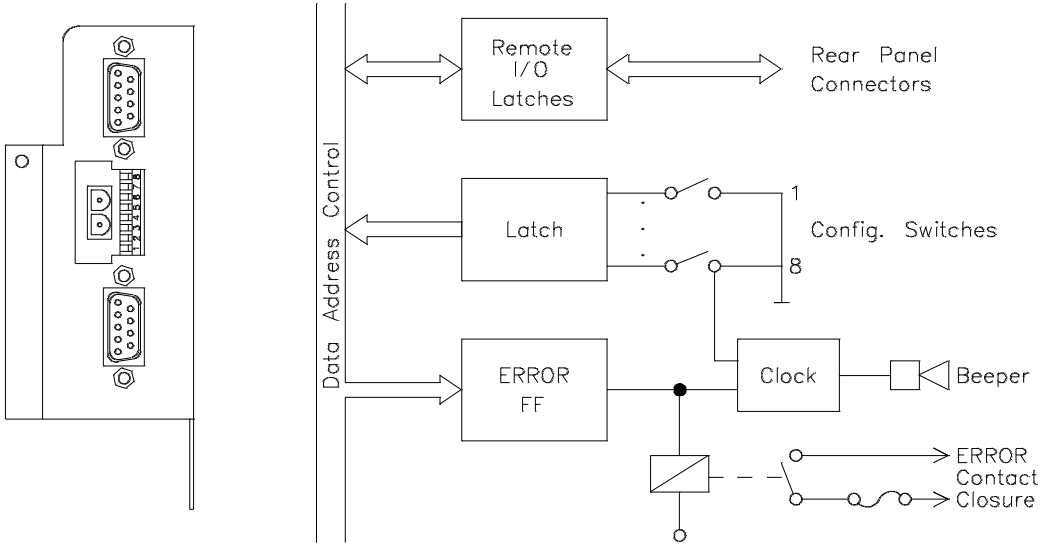

Signal Description

All signal levels are defined as standard TTL levels. 0 V is logic true, +5 V is logic false. The remote lines are both inputs and outputs (Start Request is input only):

Outputs are open-collector type Input load 2.2 kOhm against +5 V.

Start (I/O) The 1090 Series II generates a 500 ms pulse (TTL low) on pin 3 of the RCI connectors when switching to a run state. The signal is used to start external devices such as an integrator, A/D converter, or detector.

When receiving a pulse (TTL low) on pin 3, the 1090 Series II goes into the run mode, and time table events are executed.

A start signal on pin 3 does not execute the injection cycle or initiate a detector balance (see also “Start Request (Input only)”).

Table 7 **Remote Signals**

Pin	Signal	Level when active	Input/Output
1	Digital Ground		
2	Not Used		
3	Start	LOW	I/O
4	Shut Down	LOW	I/O
5	Not Used		
6	Not Used		
7	Ready	HIGH	I/O
8	Stop	LOW	I/O
9	Start Request	LOW	Input only

Stop (I/O)

The 1090 Series II generates a 500 ms pulse (TTL low) on pin 8 of the RCI connectors when switching from a run to a pre-run state. The signal is used to stop external devices such as an integrator, A/D converter, or detector.

When receiving a pulse (TTL low) on pin 8, the 1090 Series II goes into the pre-run mode.

Shutdown (I/O)

If the 1090 Series II detects an error condition such as a leak (or a leak sensor failure), pin 4 is held TTL low as long as the error condition remains. This informs external devices of the 1090 error condition.

If pin 4 is held low by an external device, the 1090 Series II switches off the pump, and sequences are aborted.

Ready (I/O)

This signal indicates the readiness of the whole system. In the ready state, pin 7 is held high, indicating to external devices that the 1090 Series II is ready to start an analysis. In a not ready state, such as during an injection, or detector calibration, pin 7 is held low. Pin 7 is also held low during run and pre-run states.

Start Request (Input only)

The start request signal (TTL low) is sent by an external controller to start multiple injections. In the LUSI system, the start request initiates a balance, and begins the sequence or subsequence currently set up in the LUSI display. In the ChemStation, the analysis defined in the Prepare to Inject screen is started.

Error Connector

The error connector (J27) provides a 500 ms contact closure when an error condition occurs. The connector is protected by a 250 V, 250 mA fast-blow fuse (F15) located on the RCI board. The fuse can be accessed after removing the top cover of the 1090 Series II.

Figure 19 **Board Layout RCI**

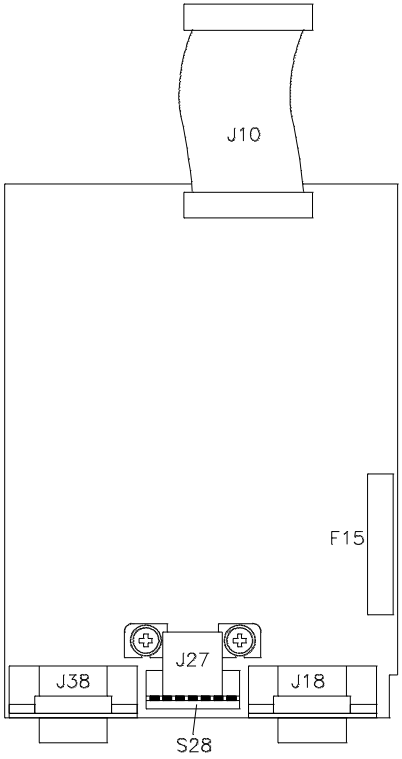

Switch Block

The switches on the switch block can be accessed from outside the 1090. The switch block (S28) has been added for future use only. Switch 8 on the switch block switches the error beeper on and off.

Compatibility

The following tables should be consulted when making repairs or updates to older HP 1090s.

Table 8 **Mainframe Controller vs. IBU**

	IBU OLD 01090-66502	IBU NEW 01090-66535
CTL 01090-66501	YES	NO *
MCO/MEM 01090-69708	YES	YES

* An new IBU can be converted to an old IBU by the addition of ROM (01090-13012) in socket U62.

Table 9 **Mainframe Controller vs. User Interface**

Mainframe Controller	User Interface
CTL 01090-66501	HP-85A/B only (HP-85B only with SS-80 format disc drives). Obsolete
MCO/MEM 01090-69708	LUSI, Pascal ChemStation, MSDOS ChemStation

Table 10 **IBU vs. CTM**

	CTM 01090-66500	CTM 01090-66500 (C) 01090-66533 01090-66537 01090-66557
IBU 01090-66502 (Rev. A)	YES	NO *
IBU 01090-66502 (Rev. B)	YES	YES
IBU 01090-66535	YES	YES

* An old IBU can be modified by making a jumper connection between Pins 18C and 25C and between Pins 19A and 20A at J81.

Table 11 **Serial Number Breaks**

HP 1090 shipped with	Germany	US
MCO/MEM (Rev. A or B)	> XXXXG00812	> 2507A00XXX
MCO/MEM (Rev. C)	> XXXXG01140	> 2604A00XXX
MCO/MEM (Rev. E)	> 3329G04821	> 3300A00000
CTM 01090-66533	NSN	> XXXXA00268
CTM 01090-66537	NSN	> 2516A00XXX
CTM 01090-66557	> 3326G04803	> 3300A00000

5

Local User Interface (LUSI)

Overview

The Local User Interface (LUSI) is the alternative to the ChemStation in its application as a user interface for HP 1090 Liquid Chromatographs.

All versions use the same main boards (DKC, DKI and DDK). Only the memory boards (piggy-back on DKC) are different:

- **LUSI** uses the MEM board.
- **LUSI-INET** uses the LIL board with a connection to the CIL board where the HP-IL can be connected.
- **LUSI B** uses the LIB board with a connection to the GPIB Connector Board at the rear of the instrument.

Both, the DKC and the DKI are connected to the internal HP 1090 I/O BUS which is controlled by the MCO board.

Figure 20 on page 73is a block diagram of the Local User Interface. The DDK, DKI, and DKC boards are common to all three LUSI versions. The type of piggy-back board on the DKC determines the LUSI version (MEM, LIB, or LIL).

NOTE

The MCO board is required for all three HP 1090 LUSI versions. The obsolete CTL is not compatible.

Figure 20 **Block Diagram LUSI**

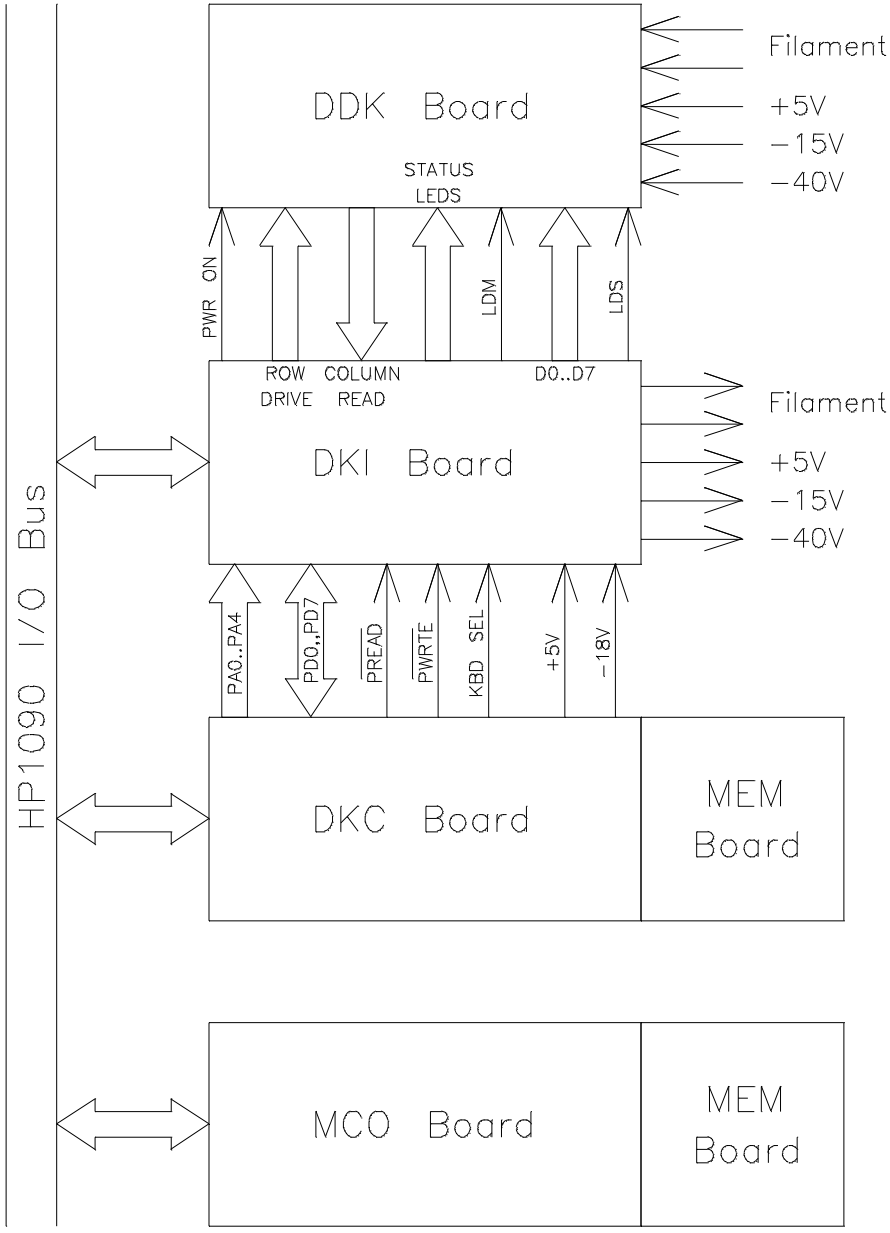

Display and Keyboard Controller (DKC)

One version is available:

- 01090-66509

For the 1090A/M version (with SYK keyboard) an external controller is required which communicates with the MCO via the IBU Board.

In the three LUSI versions (1090L), the Display and Keyboard Controller Board (DKC) replaces the IBU and external controller.

The DKC provides all control and user-interface functions, enabling the 1090 to be controlled from the local (internal) keyboard.

The heart of the Display and Keyboard Controller (DKC) is the Z80A processor. An internal processor bus system, consisting of CONTROL BUS, 16 BIT ADDRESS BUS and 8 BIT DATA BUS, connects the main functional groups on this board.

Connection to the DATA BUS of the MCO board is controlled by the MCO interface.

The interface of the DATA BUS, the CONTROL BUS and some ADDRESS bits to the DKI Board are implemented by the DKI Bus Driver.

The Frequency Dividers circuit delivers the frequencies for the Z80A clock, Filament Circuit of the Display and Keyboard Interface (DKI board) and the Timer Interrupt Flip-Flop.

The I/O Address Decoder delivers the control signals for the MCO Interface, the DKI Bus Driver and the Output Latch. Memory Decoding is controlling the RAMs and the ROMs on MEM, LIB or LIL boards (depending on LUSI version).

The firmware is stored permanently in ROMs, located on the MEM, LIB or LIL boards (depending on LUSI version), whereas data are stored in RAMs.

An on-board battery (BT71) protects against data-loss in case of power fail.

Figure 21 **DKC Board - Location of Connectors**

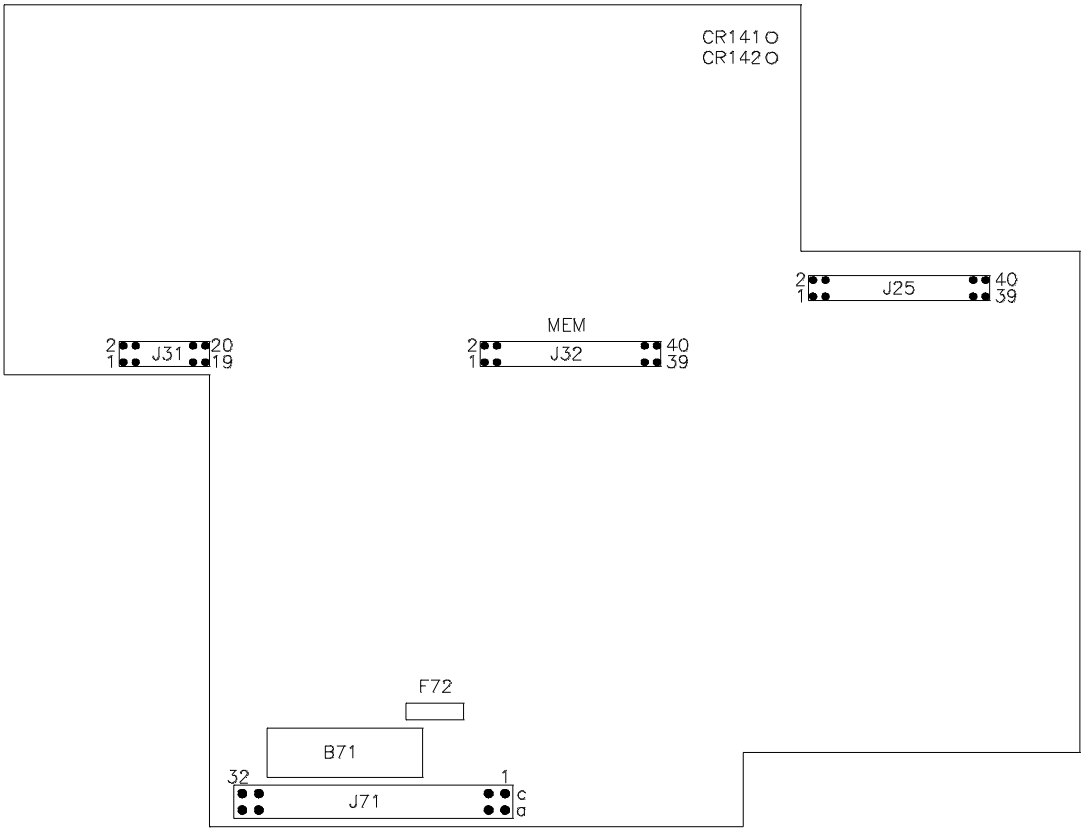

Figure 22 **Block Diagram DKC**

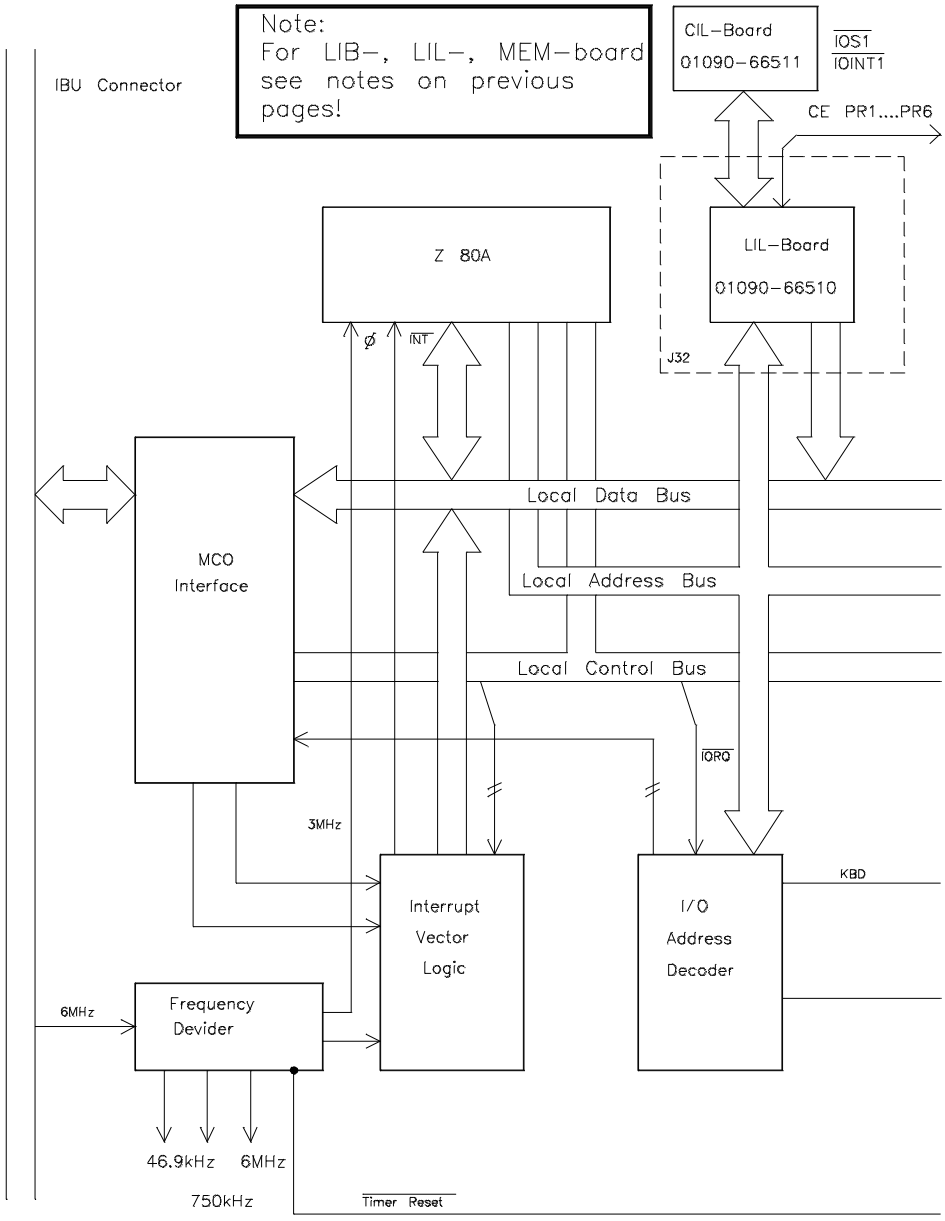

Figure 23 Block Diagram DKC

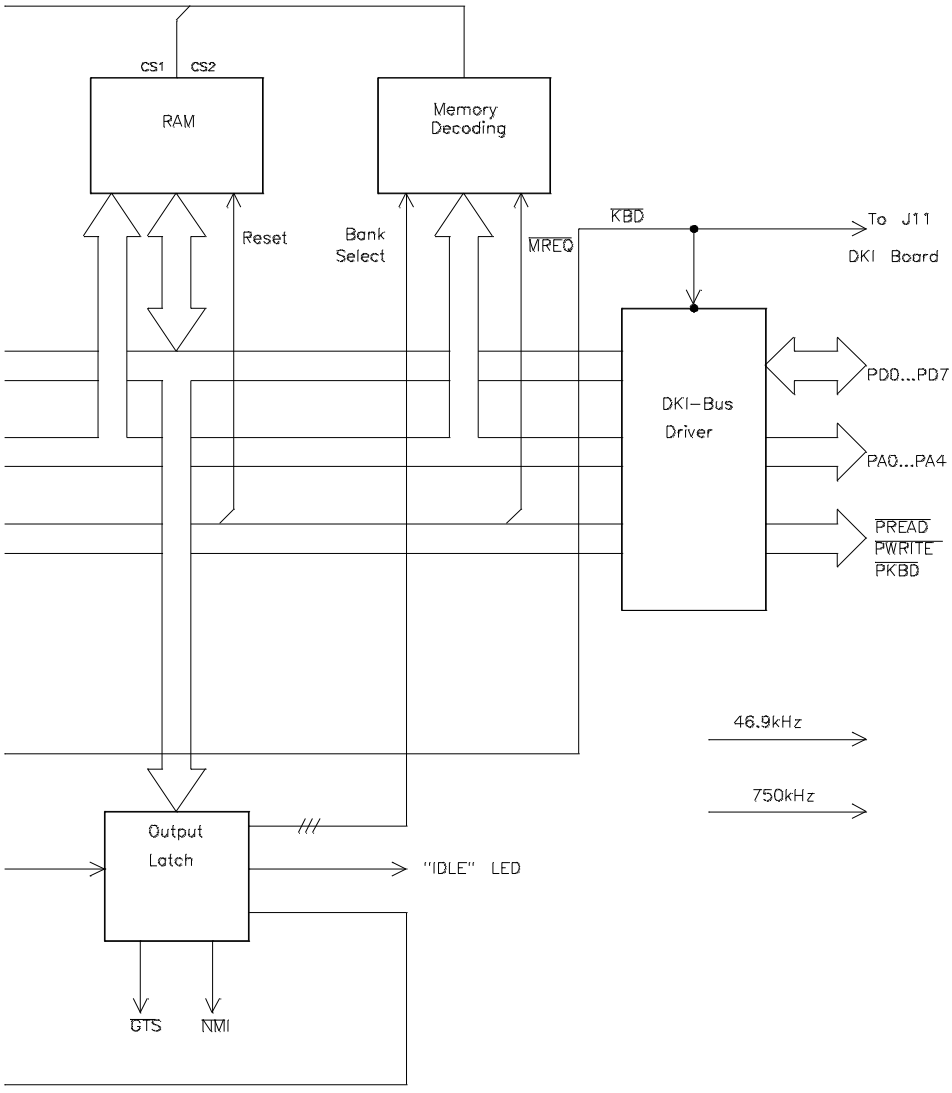

Memory Board (MEM)

Two versions are available:

- 01090-66565 (Series I)
- 01090-66575 (Series II)

The MEM board is required for the simple LUSI version.

The MEM board includes two 16 Kilobytes UV-erasable PROMs in which the program for the DKC board is stored. It is designed to simplify firmware changes in the field (complete MEM Board!).

NOTE There are two versions of the MEM board available:
01090-66575 (firmware rev F) is for repair of Series II instruments,
01090-66565 is for repair of Series I instruments.

MEM 01090-66575 (For Series II)

For the introduction of the HP 1090 Series II, this board was updated with firmware revision D. All Series II LUSI instruments require MEM 01090-66505 (obsolete) with firmware rev. D or later or MEM 01090-66575 with firmware rev. F. Prefix change 3329G04821.

NOTE Series I LUSI instruments have MEM 01090-66505 with firmware rev. A installed. Rev. A is NOT compatible with Series II instruments. For repair of Series I instruments, use MEM 01090-66565 (has old rev. A firmware installed).

MEM 01090-66565 (For Series I)

This board was introduced at the beginning of 1991. The reason was to ensure that Series I MEM firmware (rev.A) remains available, and enables the 1090 to retain the Series I features. This board is equivalent to the 01090-66505 (obsolete) with firmware rev. A.

Figure 24 **Board Layout - MEM Board**

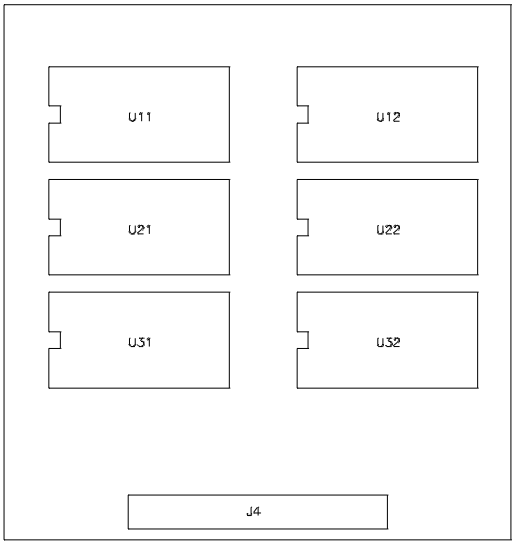

LUSI-INET Interface Board (LIL)

One version is available:

- 01090-66510

The LIL board is required for the LUSI + INET version.

The LIL board combines the memory hardware (MEM board) with the hardware for the Hewlett-Packard Interface Loop (HP-IL). The LIL board connects to the HP-IL loop via the connectors on the CIL board at the rear of the 1090.

The HP-IL chip delivers all necessary loop signals. A Hybrid Network together with a Impulse Transformer provide the signal conversion according to the HP-IL specifications. On the other side the HP-IL chip provides the Z80A bus compatible signals for transferring data back and forth to the Z80A located on the DKC board.

NOTE

No changes were made to the INET firmware for the 1090 Series II. Because of this, the following features are NOT implemented in Series II LUSI-INET instruments:
• Quaternary PV5 SDS capability
• Injector program
• Calibration program
•Remote control via the RCI
• AminoQuant method in memory 9

Remote Cables

All remote start, stop, not ready, and bottle number signals are sent via the HP-IL loop. Do not connect remote cables or BCD cables from the 1090 to external devices which are connected to the HP-IL loop. Otherwise, conflicts may occur (due to different data-transfer rates via HP-IL and analog cables) which may cause the system to hang up.

NOTE

The Remote Control Interface (RCI) board does not function in the Series II LUSI-INET version. Do not connect any cables to the RCI board, otherwise hang-ups may occur.

Compatibility with Integrators

Revision B firmware (current) is compatible with all 33XX integrators. The previous firmware revision, Rev. A, is only compatible with the 3390 and 3392 integrators (see service note 01090-053).

Figure 25 **Block Diagram - LIL Board**

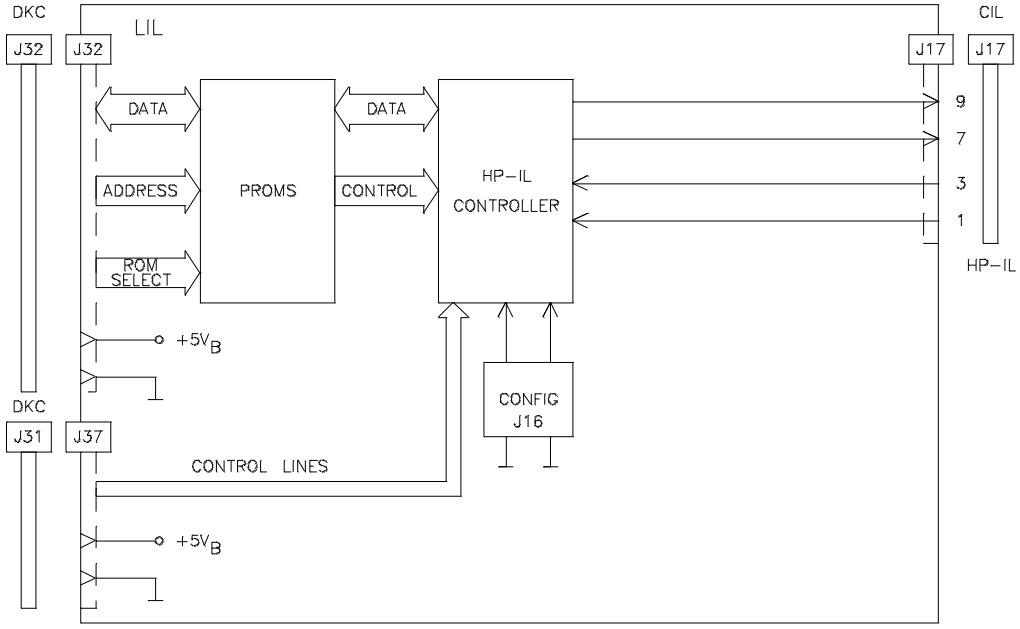

Figure 26 **Board Layout - LIL Board**

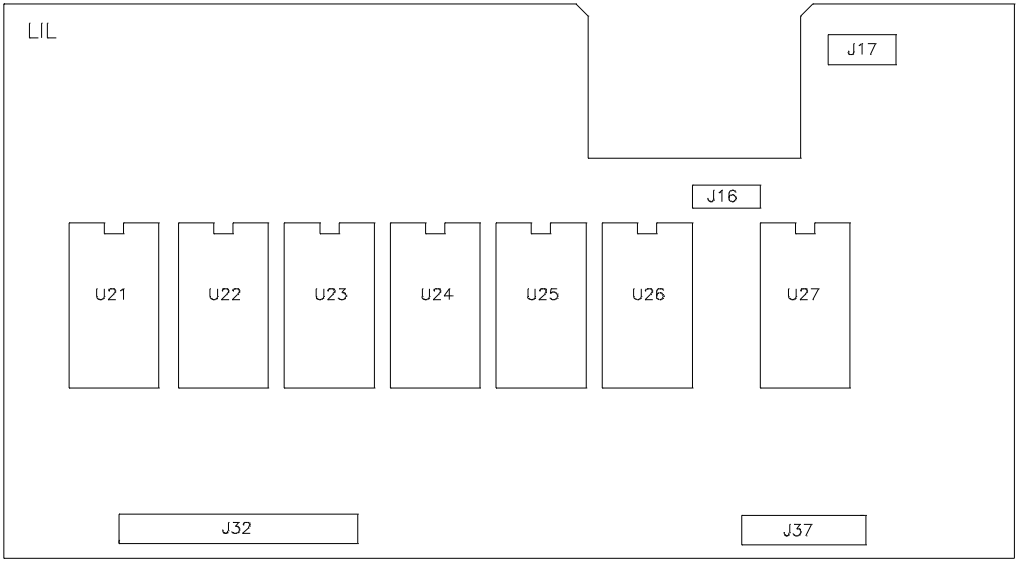

Figure 27 **CIL Assembly**

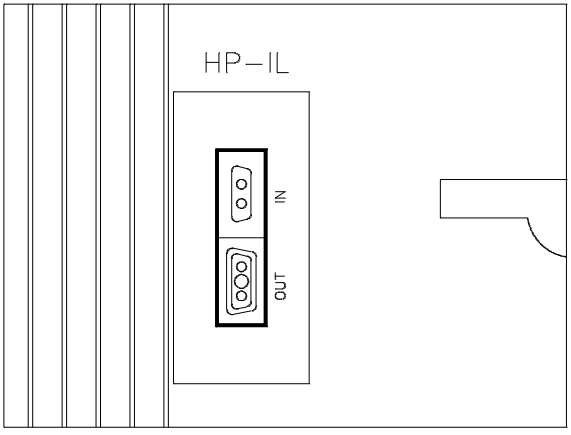

LUSI B Interface Board (LIB)

The LUSI B interface board (LIB) combines the memory (MEM board) with the hardware for the GPIB Interface.

The GPIB Interface provides the link age between the user interface and the controller of the HP 1090. It matches the GPIB protocol with the HP 1090 I/O Bus structure.

The GPIB cable from the user interface is connected to a plug at the rear of the HP 1090 mainframe. This plug is mounted on the GPIB Interface Assembly, from where a flat 26 pin ribbon cable leads to J26 of the LIB.

There are two versions of the LIB board available:

- 01090-66529 is for Series I instruments,
- 01090-66579 is for Series II instruments.

LIB 01090-66529 (For Series I)

This board remains available for repair of Series I instruments only.

NOTE LIB board 01090-66529 is not compatible with Series II instruments.

LIB 01090-66579 (For Series II)

In addition to the normal LUSI features, LIB 01090-66579 also has the following Series II functions implemented:

- Quaternary PV5 SDS capability.
- Injector program.
- Calibration bracketing in sequence mode.
- Local remote switching from the keyboard.
- AminoQuant method in Method 9.

NOTE When connected to a Phoenix DOS ChemStation, the local/remote switching from the LUSI keyboard only works with LIB 01090-66579 with firmware rev. E and later.

Figure 28 **LIB Board - Block Diagram**

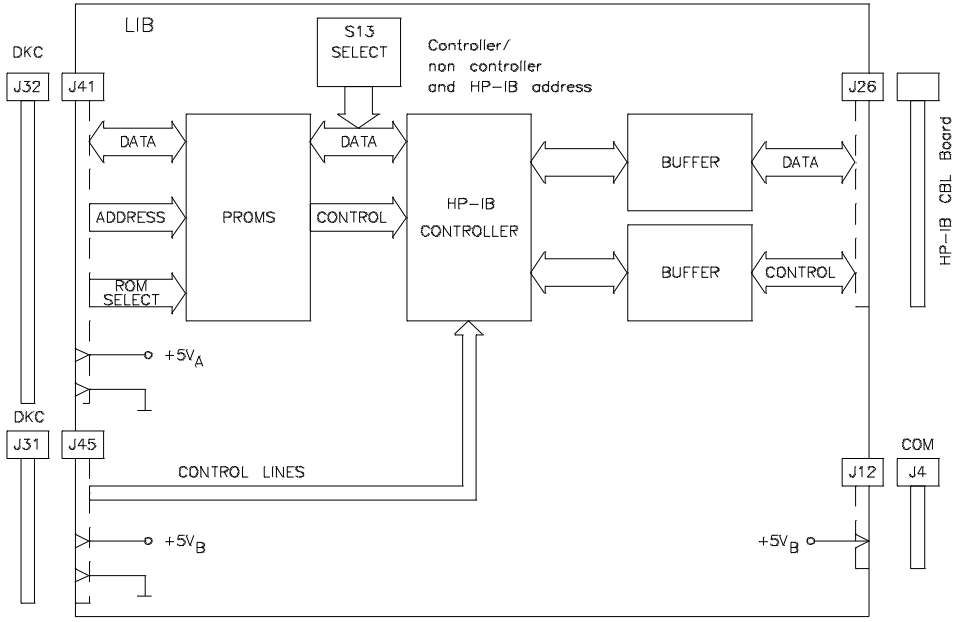

Figure 29 **LIB Board Layout**

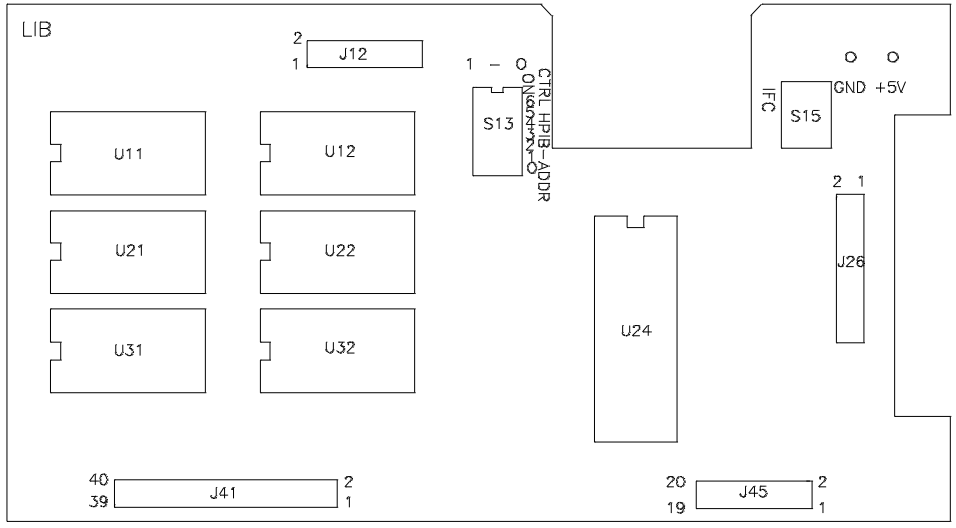

Display and Keyboard Interface (DKI)

One version is available:

- 01090-66507

The Display Keyboard Interface (DKI) is located in the pump inspection door, attached to the Display Driver and Keyboard (DDK).

The 8 status LEDs are driven by an 8-bit latch.

A 3 TO 8 Decoder (U38) generates 8 ROW-DRIVE lines for the keyboard-matrix.

A BUS Driver is used for the COLUMN-READ lines of the keyboard-matrix. The filament voltage for the vacuum fluorescent display is 6 VAC TRUE RMS ±0.1 V. This filament voltage is about 10 V above compared to the –36 V.

A series regulator provides about –15 V. Potentiometer R32 sets the filament voltage to 6 V_{RMS} ±0.1 V. To get –36 V from the –18 V supply, a STEP-UP-REGULA TOR is built with an Error Amplifier, PULSE WIDTH MODULA TOR and a SWITCHER.

An AUTOMATIC BRIGHTNESS CONTROL is implemented by a photo transistor (located on the DDK Board) with a voltage range of about - 30 V to –38 V.

Figure 30 **DKI Board - Block Diagram**

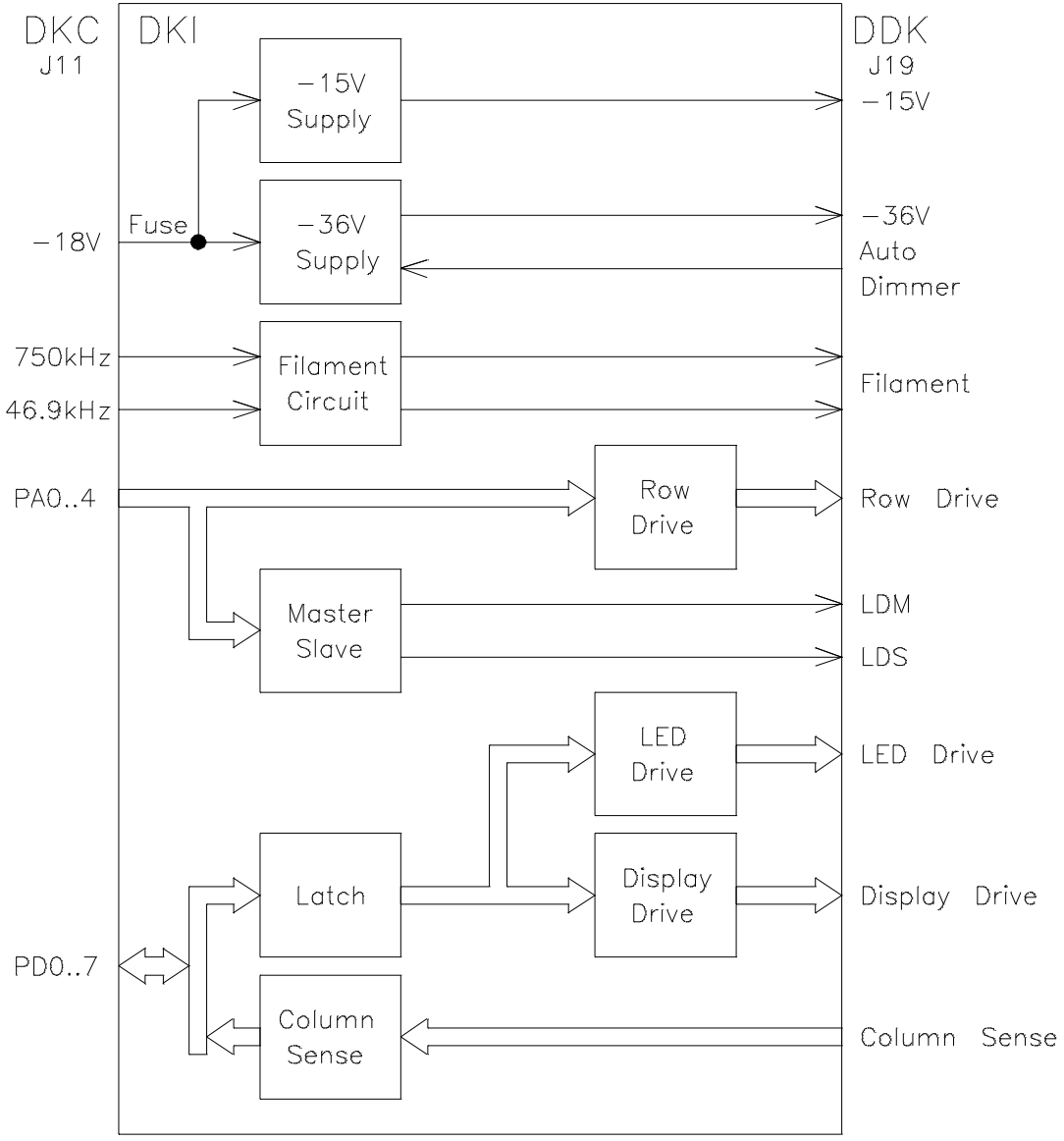

Figure 31 **DKI Board Layout**

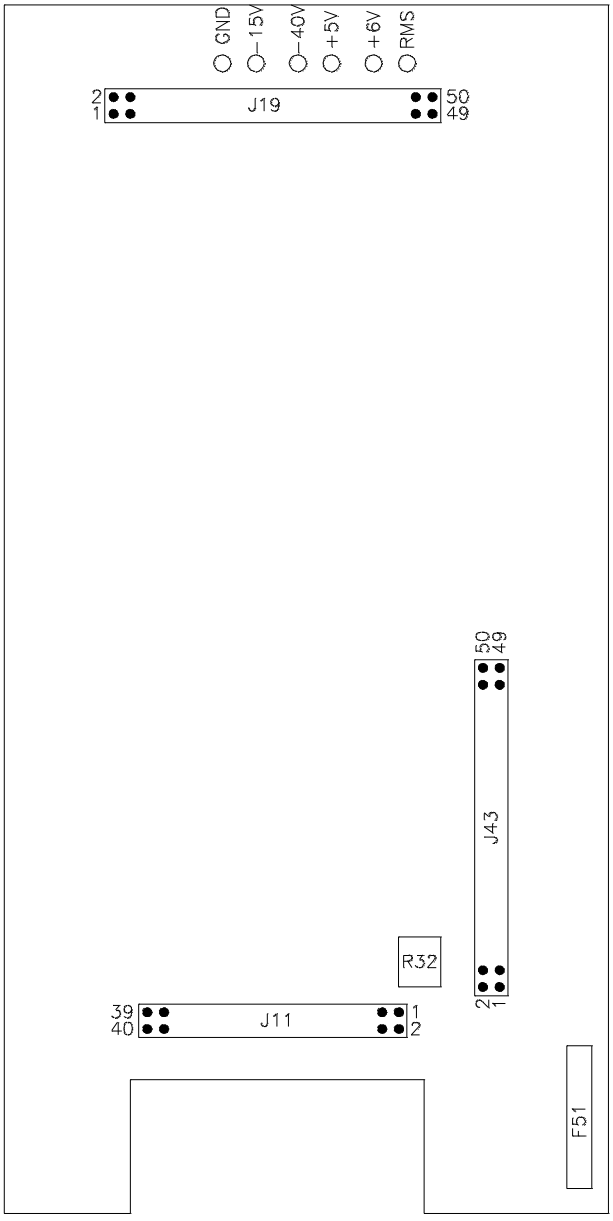

Display Driver and Keyboard (DDK)

One version is available:

- 01090-66553 for Series I/II instruments.

NOTE 01090-66553 is fully backwards compatible, however, there are some minor changes of the silk screening for the injector program and calibration functions.

The Display Driver and Keyboard (DDK) is located in the pump inspection door behind the DKI Board.

For Series II instruments, the DDK (01090-66553) has the new color, and also new labelling for the calibration bracketing function.

The main components on this board are:

- a 32-Character Vacuum Tube Fluorescent Display,
- 8 STATUS LEDs
- one photo transistor for automatic brightness control
- 6 x 7 keyboard matrix

Figure 32 **DDK Board - Block Diagram**

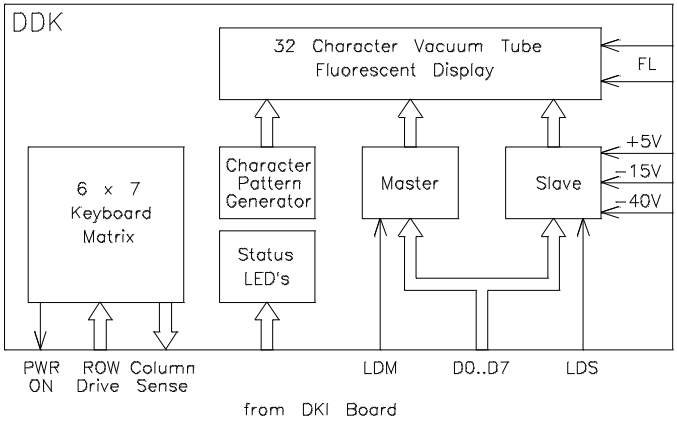

Figure 33 **DDK Board - Interconnection Diagram**

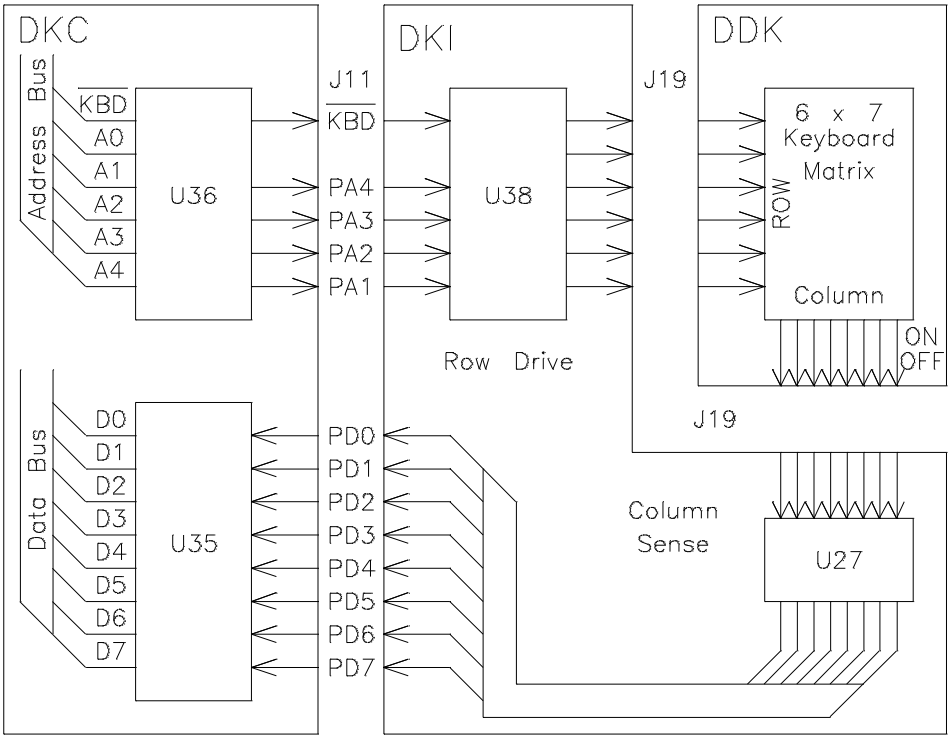

6

Power Supply

Overview

Power Supply States The Power Supply provides all AC and DC voltages required for operation of the HP 1090 mainframe and all integrated modules.

There are two states possible for the power supply with the line power switch at the rear of the HP 1090 set to ON. The table below gives the voltages available in each state.

Table 12

Power Supply States	
POWER OFF:	all AC voltages
	DC voltages:
	+24 V, -24 V,
	+17 V, -17 V,
	+ 36 V unregulated raw voltage (Rev.A only)
	+ 5 VB (regulated voltage)
POWER ON:	all AC voltages
	all DC voltages

Switch On

Setting the line power switch to ON always brings the power supply into the POWER OFF state. This is indicated with a LED in the POWER OFF key at the keyboard.

Pressing the POWER ON key at the System Keyboard generates a low going signal on the POWER ON line. This signal is transferred to the Control Logic on the PSC. It is routed from the system keyboard to the Controller Motherboard (CTM) and from there to the PSM where the PSC plugs in. The Control Logic in turn sets the SLEEP signal into a low state which allows all regulated voltages to be generated. The SLEEP signal is used on the two PWS boards and there is an equivalent to the SLEEP signal used on the PSC.

The POWER ON state is indicated with a LED in the POWER ON key. In addition the DETECTOR OFF and the PUMP OFF LEDs are ON (default turn-ON state). No ERROR or NOT READ Y LED should be ON longer than 10 seconds after turn-ON with a properly working HP 1090.

Figure 34 **Changing States 1**

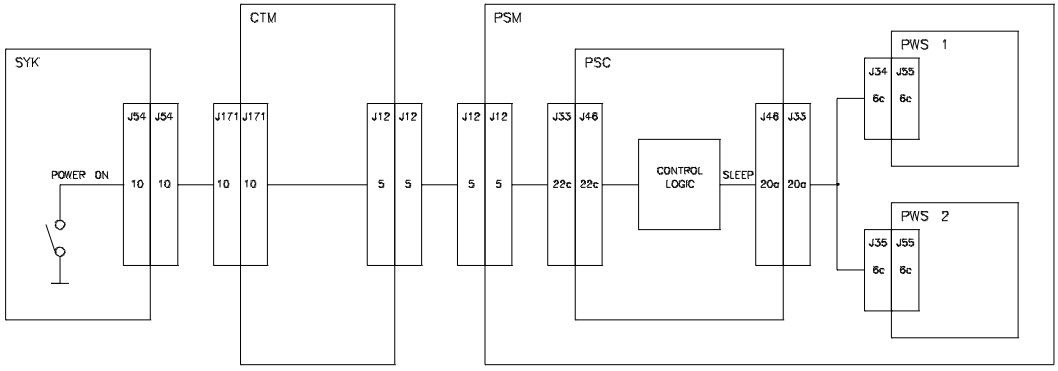

Figure 35 **Changing States 2**

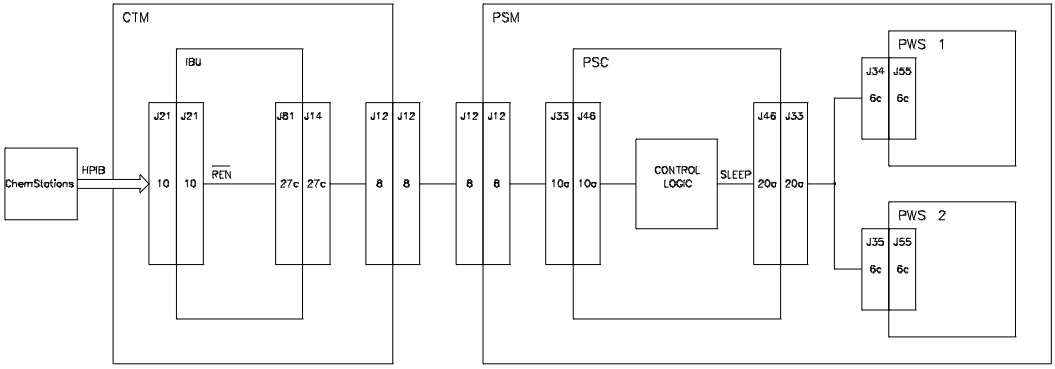

Figure 36 **Changing States 3**

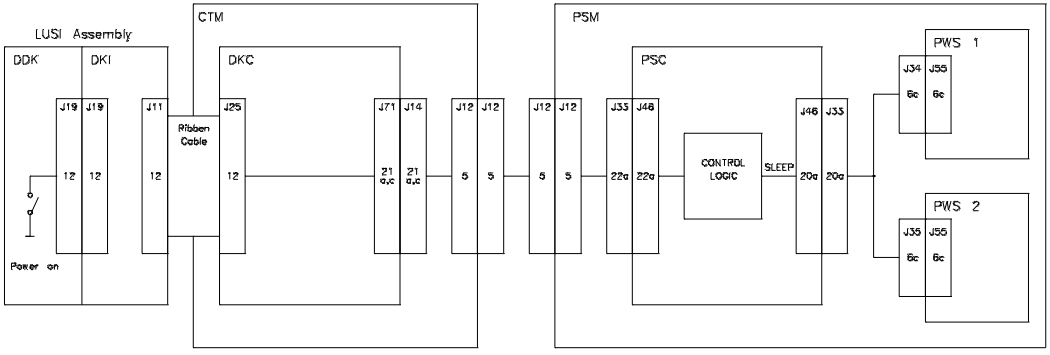

Figure 37 **Changing States 4**

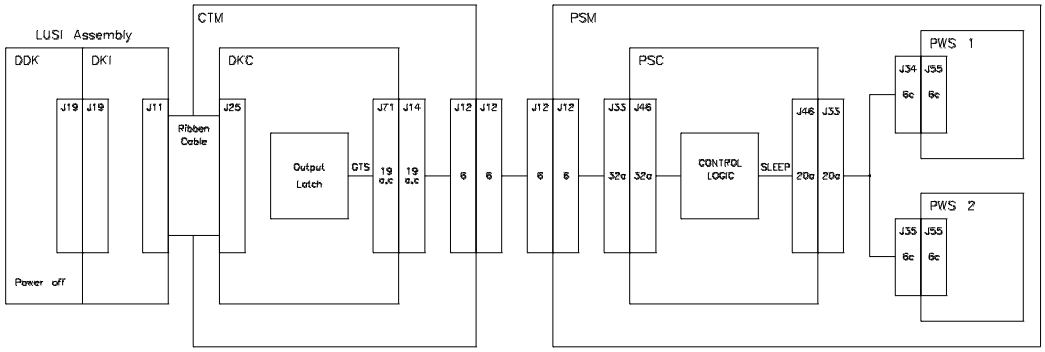

Figure 38 **Changing States 5**

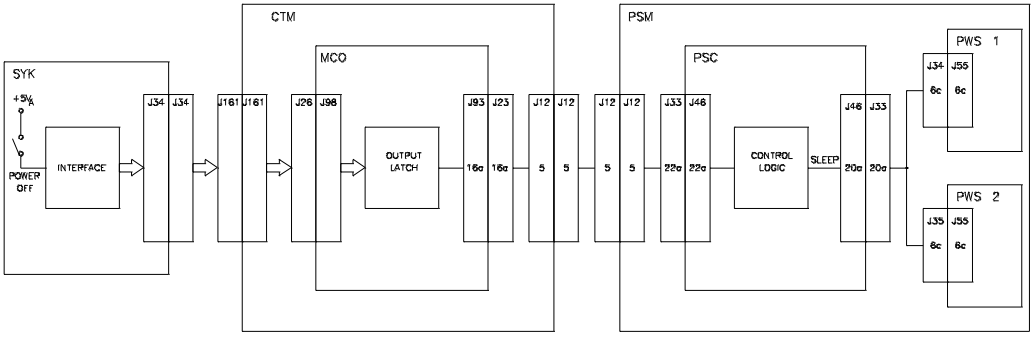

Figure 39 **Changing States 6**

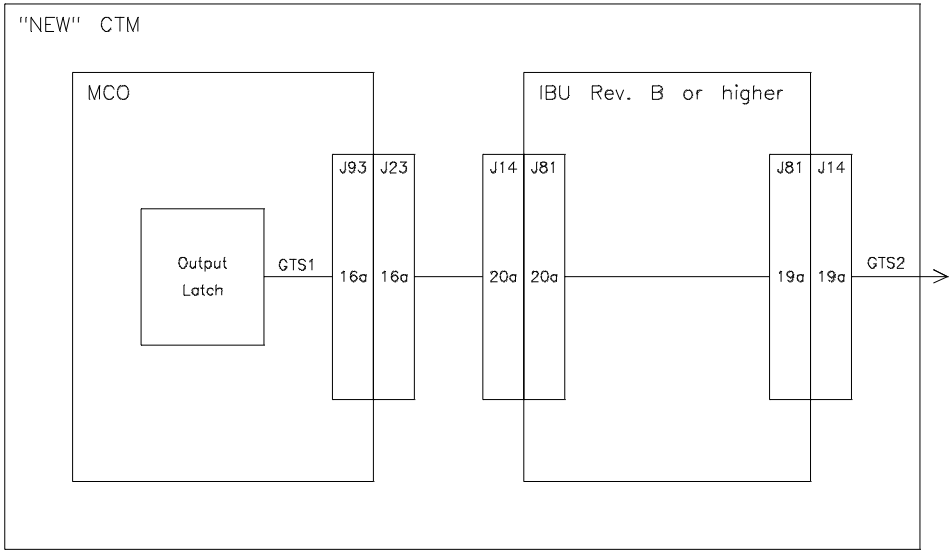

Voltage Generation

Power is generated on the following boards:

Table 13 **Power Supply Boards**

Description	Part Number	Qty
Power Supply Board (PWS)	01090-66522/-69522	2
Power Supply Control Board (PSC)	01090-66523/-69523	1
Power Supply Mother Board (PSM)	01090-66524	1
Primary Board (PRI, A C fan only)	01090-66525	1
Primary Board (PRI, DC fan only)	01090-66555	1

AC Voltages

There are several AC voltages used throughout the HP 1090.

Table 14 **AC Voltage Generation**

From	To
Line Receptacle:	
Line Voltage	Line Power Switch
Line Power Switch:	
Line Voltage	Transformer, High Pressure Pump Oven-Interface Board, AC Main Fan (PRI 01090-66525 only!)
Transformer:	
170 VAC, 85 VAC	Deuterium Lamp Power Supply Board for 4 VAC built-in Detector
2 x 15 VAC, 30 VAC	Power Supply Control Board (PSC)
2 x 20 VAC	Power Supply Board 1 (PWS 1)
2 x 20 VAC	Power Supply Board 2 (PWS 2) for detector

DC Voltages

Regulated as well as unregulated DC voltages are generated on the PSC and on PWS 1 and PWS 2. Table 15 gives information on generation and usage of DC voltages on boards inside the HP 1090.

Table 15 DC Voltage Distribution

Board	+36 V	+24 V	-24 V	+18 V	-18 V	+17 V	-17 V	+12 V	-12 V	+5 VA	+5 VB
PSC	G	U1				G	G	G	G	U1	G
PWS1		G1	G1	G1	G1	U				G1	U
PWS2		G2	G2	G2	G2	U				G2	U
PRI		U1									
ECI		U1								U1	
OVI		U1								U1	
SYK										U1	U
CTL/MCO				U1	U1					U1	U
IBU										U1	
DKC				U1	U1					U1	U
DKI	receives +5 VA, +5 VB and -18 V from DKC										
DDK	receives 15 V and -36V from DKI										
ISD		U1		U1						U1	
ICO		U1		U1						U1	
SCO		U1								U1	
IOC										U1	
MDR	U							U	U	U1	
SCT										U1	
MCD	U							U	U	U1	
MPL										U1	
RVS										U1	
PSS										U1	

Table 15 DC Voltage Distribution

Board	+36 V	+24 V	-24 V	+18 V	-18 V	+17 V	-17 V	+12 V	-12 V	+5 VA	+5 VB
LPT								U	U		
HPT								U	U		
ADA		U2		U2	U					U2	
FPD		U2								U2	
DPS		U2		U2	U2					U2	
SPA	±15 V from ADA										
RPA	±15 V from ADA										
ARO		U2		U2	U2					U2	
ADC				U2	U					U2	
DAP										U2	
COM										U2	U2
DAI				U2	U2					U2	

U unused

U1 used and supplied from PWS 1

U2 used and supplied from PWS 2

G generated

G1 generated on PWS 1

G2 generated on PWS 2

Primary Board (PRI)

Two versions of the Primary Board are available:

- 01090-66525 is for instruments with an AC main fan.
- 01090-66555 is for instruments with the new DC fan installed (since end of 1990).

PRI (01090-66525)

Line power, connected to the receptacle with built-in line flitter at the rear of the HP 1090 mainframe is fused with fuses F1 and F2 (single phase and split phase operation). Connection then leads to the Primary Board (PRI). Fuse F2 (neutral) is not use d for North American units.

Main power is connected to the line power switch with the Power Switch Cable. From connector J3 line power is applied to the Line Voltage Selection Switches S1 and S2, to the Oven Interface Board (OVI) and the High Pressure Pump. Line Voltage Selection Switches match the line voltage to the primary windings of the Power Transformer and to the Main Fan (AC version only), which is connected to the PRI with the Fan Primary Cable. The AC fan will be switched ON with the fan relay K1 in the POWER ON state.

The OVI, connected to the PRI with the Oven Primary Cable is powered as long as the line power switch is set to ON.

Power to the High Pressure Pump, connected to the PRI with the Pump Primary Cable will be applied when the triac Q1 is ignited. Capacitor C1, mounted on the rear panel of the power supply is a starting capacitor.

Secondary windings connected to the Power Supply Motherboard (PSM) are 30 VAC and 2 x 15 VAC with J41 and 4 x 20 VAC with J21. 2 x 85 VAC and 4 VAC are connected with J9 to the detector motherboard of the built-in detector.

Power Requirements

Line voltage:	100/120/220/240 VAC
	+ 5 / - 10 %
Line frequency:	50 Hz (48 - 55 Hz),
	60 Hz (57 - 66 Hz)
Power consumption:	750 VA maximal

PWR Line Disturbances

1. Surges and sags should not exceed ±20% of the normal line voltage. Line voltage should return to steady state condition within 20 ms.
2. Line transients (common mode or normal mode) > 10 ms pulse width and > 50% of the normal line voltage may produce instrument malfunctions.

Electromagnetic Interferences

Radiated susceptibility

The instrument operates satisfactorily in electromagnetic fields of < 1Volt/meter, from 14 KHz to 1 GHz.

Exception: At frequencies between 10 and 300 MHz detector noise may increase.

Conducted susceptibility

Radio frequency signals conducted through the power line should be limited to:

- 3 V_{RMS} maximum at 30 Hz to 50 KHz
- 1 V_{pp} maximum at 50 KHz to 400 MHz

PRI 01090-66545 (obsolete)

In order to comply with CSA requirements, a DC main fan was introduced. This change required the new PRI board. Relay K1 (see “PRI 01090-66545 (obsolete)” on page 101) was replaced by switching circuitry required for the new DC fan. The 24 VDC which was used to switch relay K1 is now used to supply the 16 - 18 VDC to drive the new DC fan. The connector for the fan primary cable was replaced by a small 2-contact connector. The function and lay out of the rest of the PRI board is the same as the AC-fan version (01090-66525).

DC Fan

The fan is a 24 VDC type which connects to the new PRI board. New switching circuitry on the PRI board controls the DC supply (16 - 18 VDC) to the fan.

Introduction of the new fan also required changes to the fan panel and foam parts behind the fan (see “*System Mainframe and Overview*” section).

Prefix Change

All instruments with prefix 3040G have the DC fan and PRI 01090-66545 installed.

Compatibility

PRI 01090-66545 is NOT compatible with the old AC fan. The AC-fan version of the PRI board (01090-66525) is NOT compatible with the DC fan. Both versions of the PRI board, the DC fan, and the AC fan remain available for replacement.

NOTE

01090-66525 Revision B and 01090-66545 PRI Boards have two additional Capacitors installed for better noise suppression on the incoming power line.

PRI 01090-66555

The triac Q1 on the primary board turns on the power to the booster pump. For cooling reasons Q1 is fixed with a screw to the board. Evaluation of defective boards showed that the triac Q1 and the board were damaged by over-temperature which burned triac and board. The reason could be traced down to a bad connection (too high resistance) between the press-in-nut and the connected track.

In a first step the primary board 01090-66545 was modified. A wire was soldered between the triac and R1. Since September 1993 all 1090's were shipped with the modified primary board (rev. C). Now the final solution is available. The design of the primary board 01090-66555 has been changed. The triac is now soldered to the board and an additional heat sink assures good heat dissipation.

Figure 40 **Board Layout - PRI (AC Fan)**

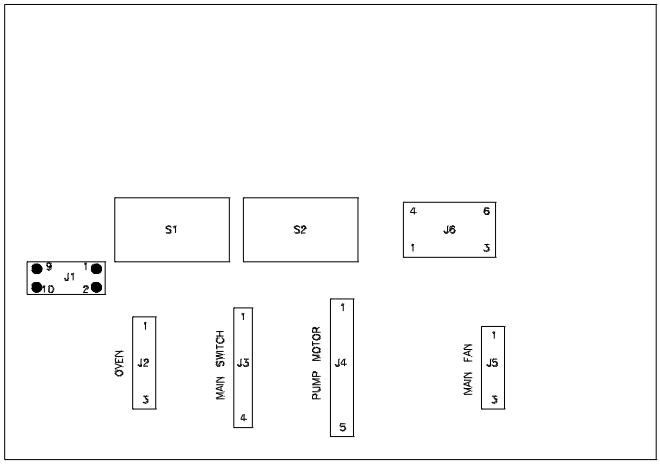

Figure 41 **Block Diagram - PRI (AC Fan)**

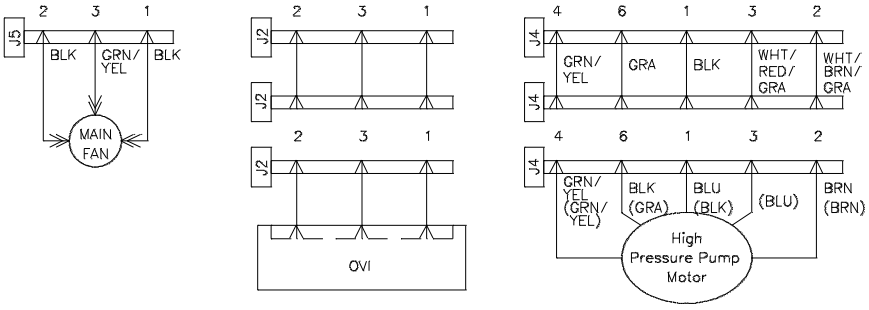

Figure 42 **Block Diagram - PRI (AC Fan)**

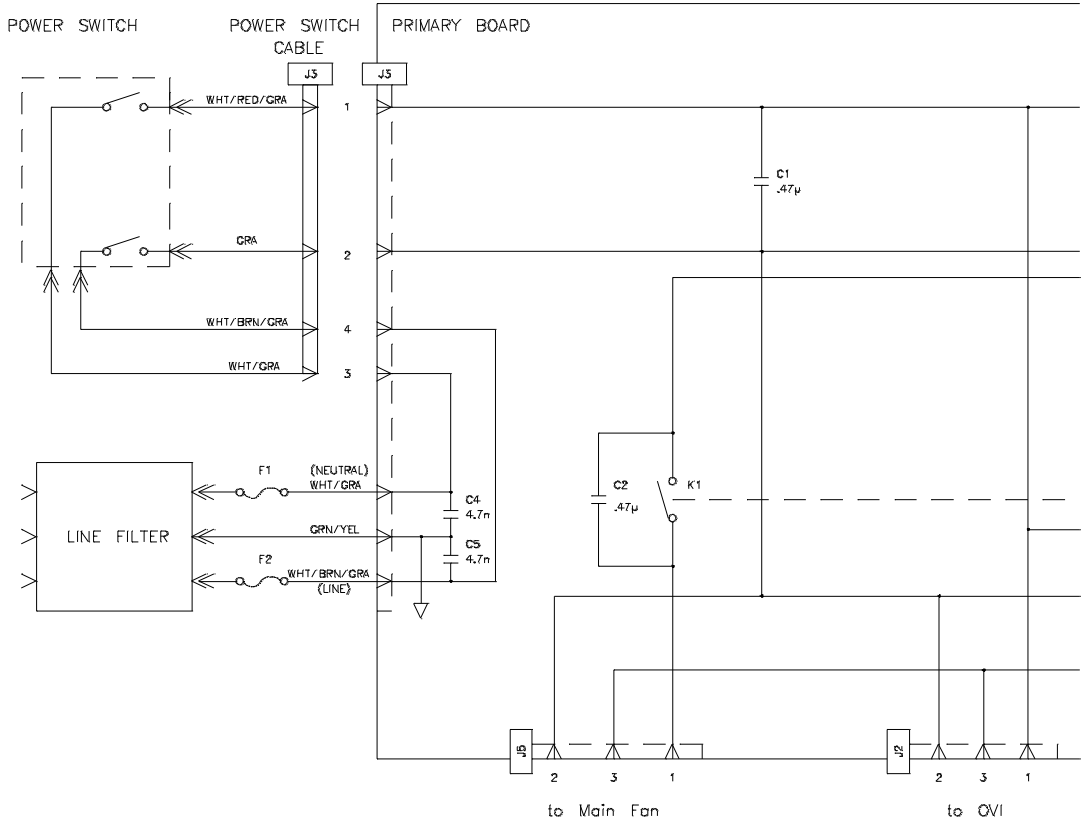

Figure 43 **Block Diagram - PRI (AC Fan)**

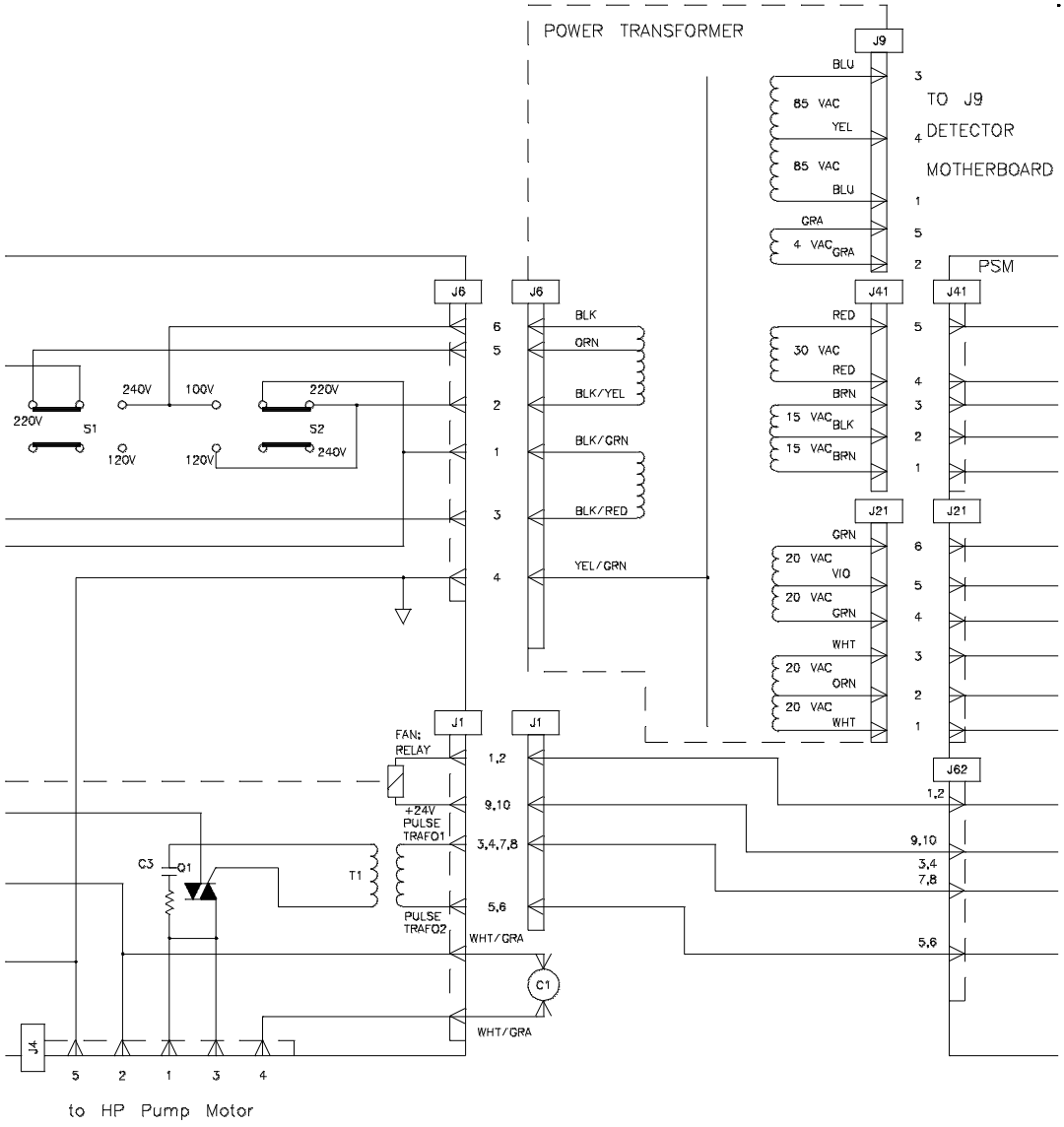

Figure 44 **Block Diagram - PRI (DC Fan)**

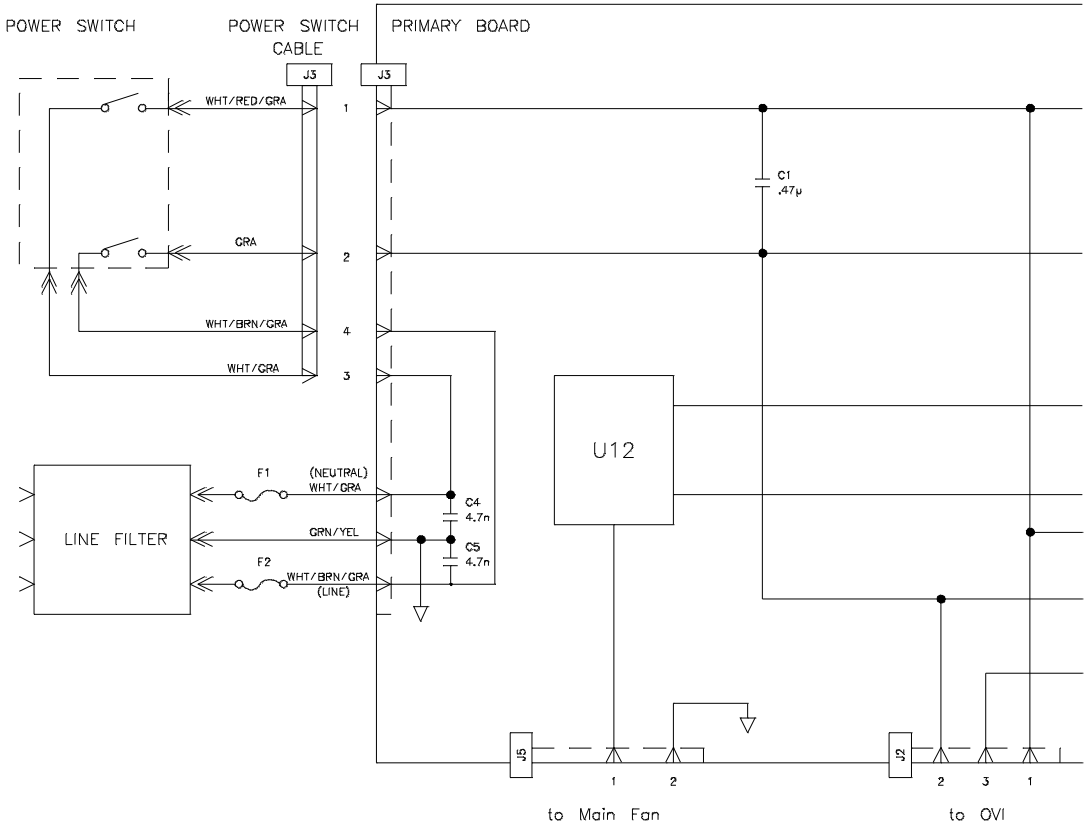

Figure 45 Block Diagram - PRI (DC Fan)

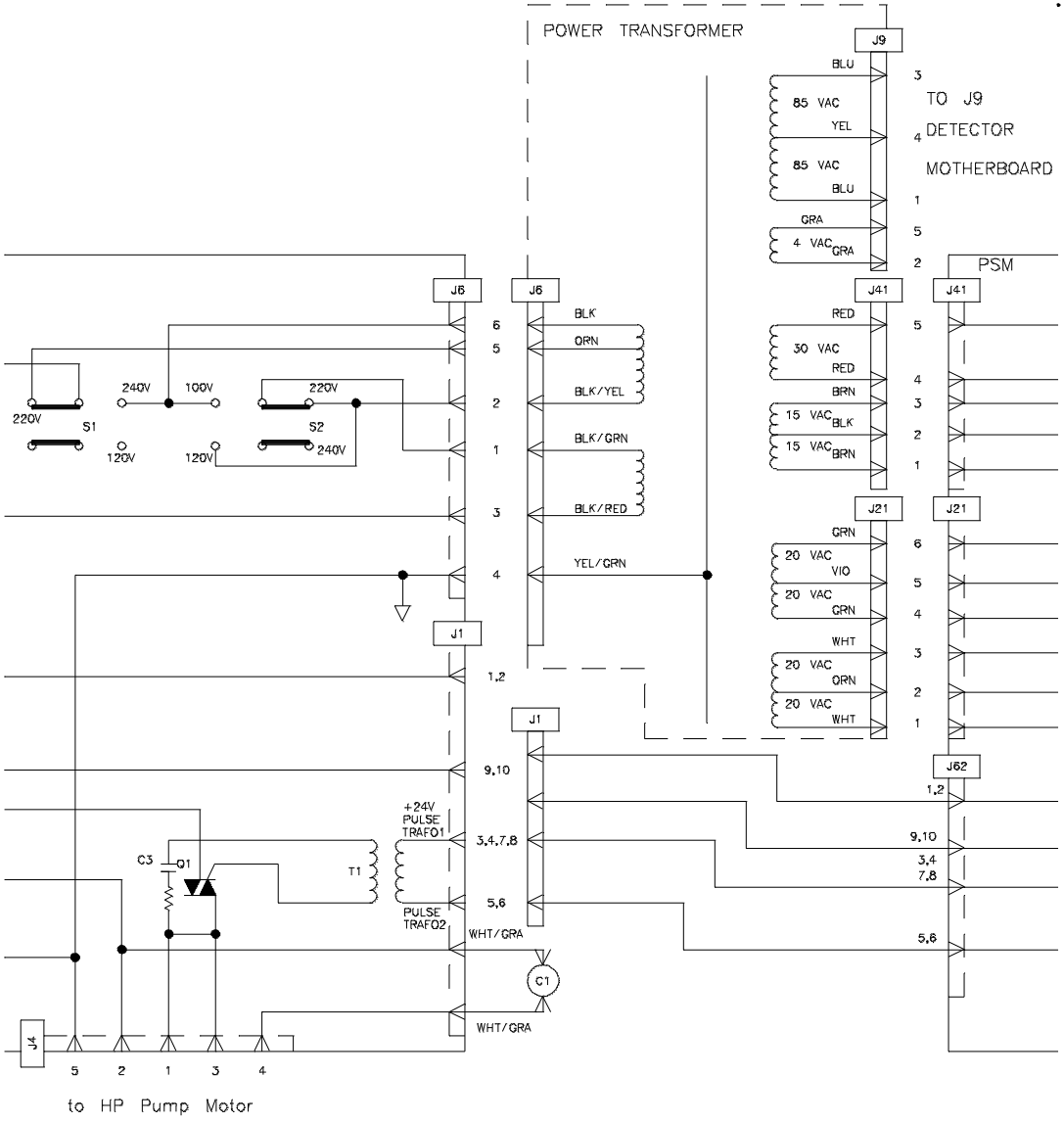

Figure 46 **Board Layout - PRI (DC Fan)**

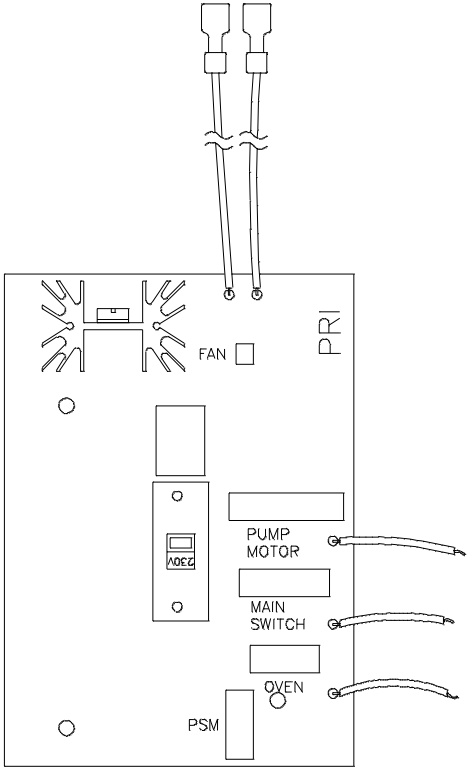

Figure 47 **Block Diagram - PRI (DC Fan)**

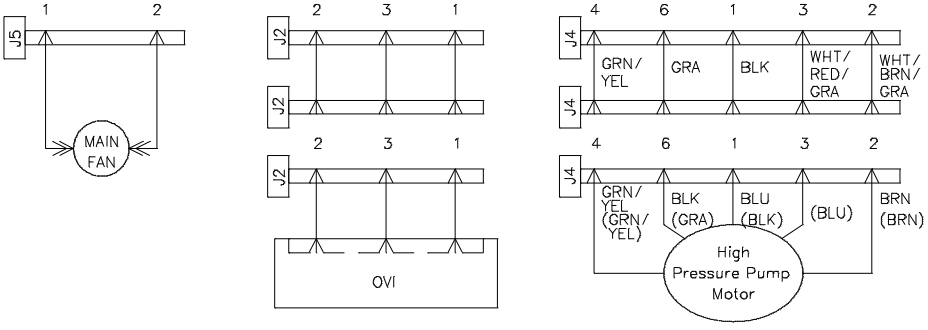

Low Power Distribution

All low power (voltage less than 30 VAC or +36 VDC) is distributed to the various parts of the HP 1090 from the Power Supply Motherboard (PSM).

DC power generation is split into two sections. Power Supply Board 1 (PWS 1) supplies the Solvent Delivery System, the External Contacts Interface Board (ECI), the Primary Board (PRI) and the Controller Motherboard (CTM). Power Supply Board 2 (PWS 2) exclusively provides power to the built-in Detection System. Each one of the two identical PWS boards is supplied from the transformer with separate AC voltages (2 x 20 VAC) as well as the Power Supply Control Board (PSC) (2 x 15 VAC and 30 VAC).

The PSC controls operation and status of the two PWS boards (CLOCK and SLEEP) and provides two extra voltages to the CTM and the SDM (+5 VB and +36 V). Several other control signals are generated and connected from the PSC to the respective boards; FAN RELAY and PULSE TRAFO signals to the PRI; ZCP to the ECI; PS STATUS, POWER FAIL and ZCP HEATER to the CTM.

Status of the power supply is controlled by the signals POWER ON, REN (user!) and GTS (controller!). The PUMP ON signal requires synchronization on the PSC before it is connected to the PRI.

Figure 48 **Block Diagram - Low Power Distribution**

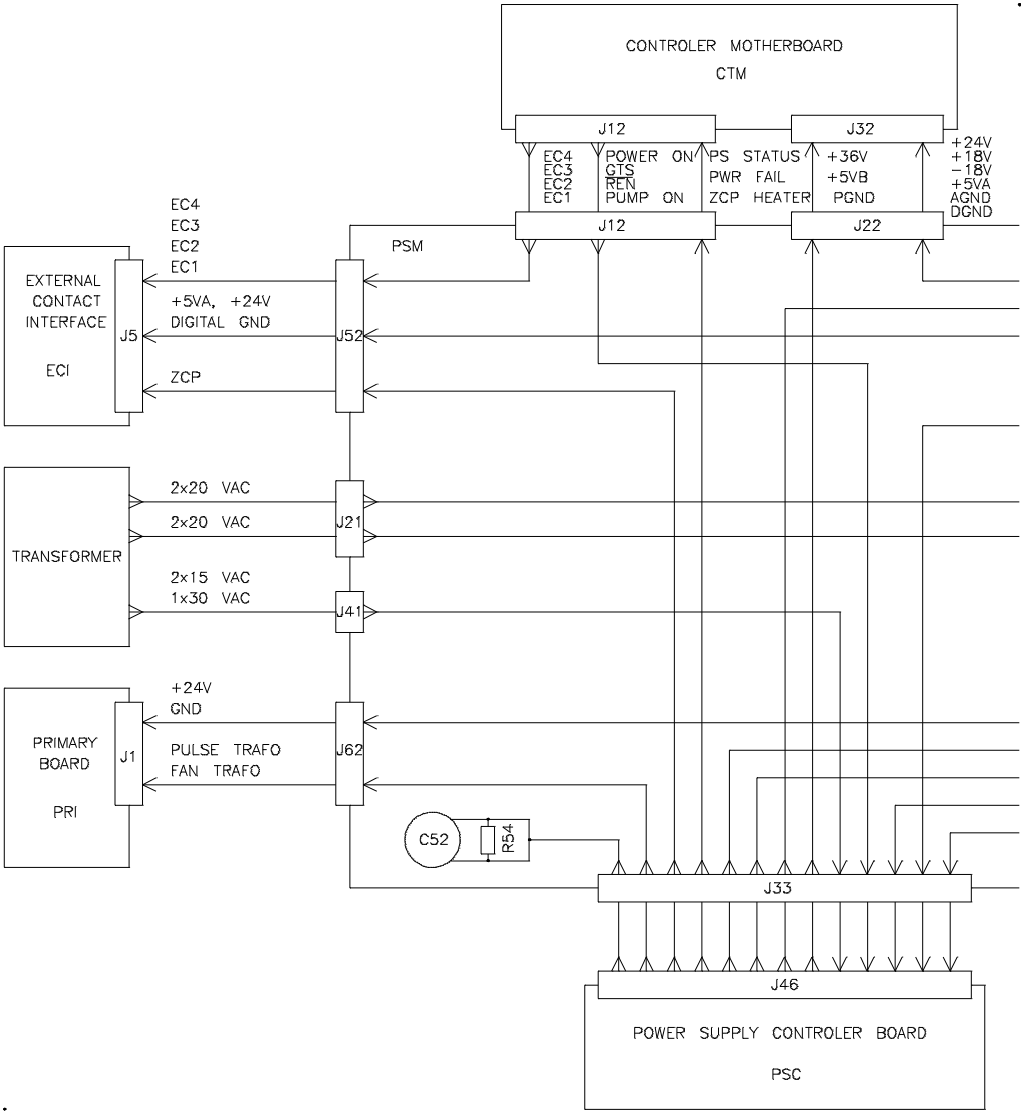

Figure 49 **Block Diagram - Low Power Distribution**

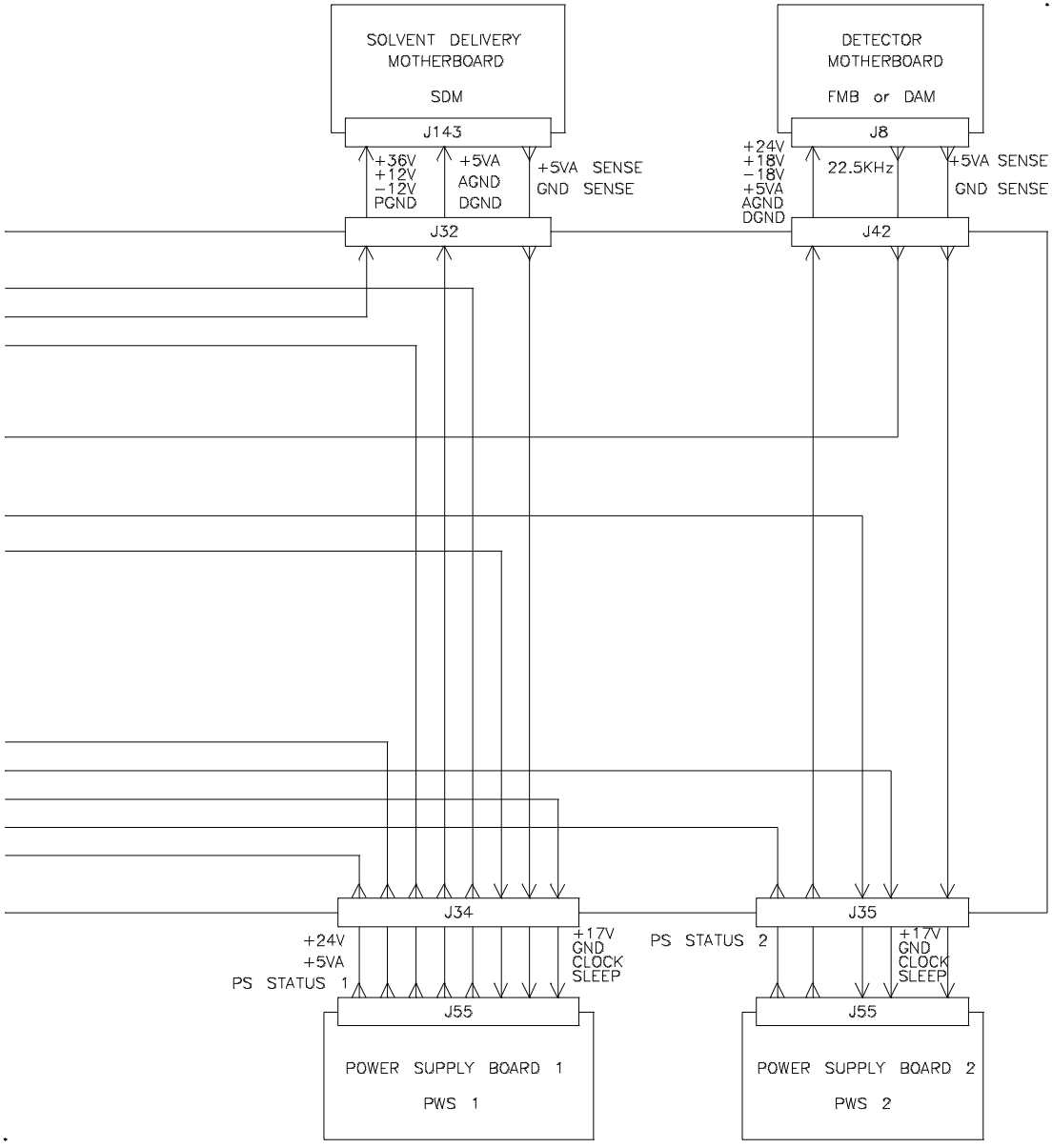

Power Supply Board (PWS)

The rectification circuit provides filtered ±24 VDC from 20 VAC. Both voltages are fused; +24 VDC with F351 (8 A); -24 VDC with F352 (2 A). Fuse F351 will blow when the Over Voltage Protection Circuit detects an over voltage condition of the +24 V (limit approximately +34 V) or the +5 V SENSE (limit approximately +6 V). Regulation circuits for +18 VDC and -18 VDC derive regulated voltages from the raw voltages +24 VDC and -24 VDC. +18VDC is derived from +24 V, -18 VDC is derived from -24 VDC. This regulation will only work with a SLEEP signal set to low. With the SLEEP signal set to high, the voltage output of the +18 VDC Regulation Circuit will drop to approximately. 1.2 V, which in turn causes the -18 VDC Regulation Circuit output to drop to approximately. -1.2V. In this POWER OFF condition also the +5 V_A will drop to approximately. 0 V, since the +18 VDC is required for the +5 V_A Generation Circuit.

The +5 V_A power is generated by a switching power supply capable of delivering up to 10 A. The reference voltage for this supply is provided by a 5 V Zener diode. This reference voltage is compared to the 5 V SENSE line by an Error Amplifier. The output of the Error Amplifier determines the duty cycle of the 22.5 KHz switching signal coming from the Clock Driver. The duty cycle of the Pulse Width Modulator determines the ON-time of the Power Switcher and hence its output voltage. As current demand increases, the +5 V SENSE input drops slightly, so the output of the Error Amplifier drops also. This increases the duty cycle of the Pulse Width Modulator and therefore increases the current output of the Power Switcher.

Overcurrent protection for the switching power supply is accomplished by monitoring the voltage drop across the Current Sensing Resistor. If the current exceeds 10 A then the Overcurrent Protection Circuit will pull the 5 V reference low to maintain a maximum of 10 A current.

In a real shortage condition the power supply will start oscillating. Shortage current is less than 10 A.

The Voltage Status Circuit provides a status signal to the PSC and turns the LED ON in case that one of the voltages +18 VDC. -18 VDC or +5 V_A is too low. The same status signal is generated in case the +18 VDC exceed 18 VDC or the -18 VDC exceed -24 VDC.

PWS Revisions

Revision A

This revision has all features described above.

Revision B

A split is made between Analog and Digital Ground. Analog Ground is used for the following circuits:

+18 VDC Regulation, -18 VDC Regulation, Error Amplifier, Pulse Width Modulator, Clock Driver and Voltage Status.

Revision C/D

Some minor changes on components.

Revision E

Some minor changes.

Revision F

Some minor changes.

Revision G

Current revision.

NOTE There are no compatibility considerations when replacing older PWS boards with the current revision.

Figure 50 **Block Diagram - PWS**

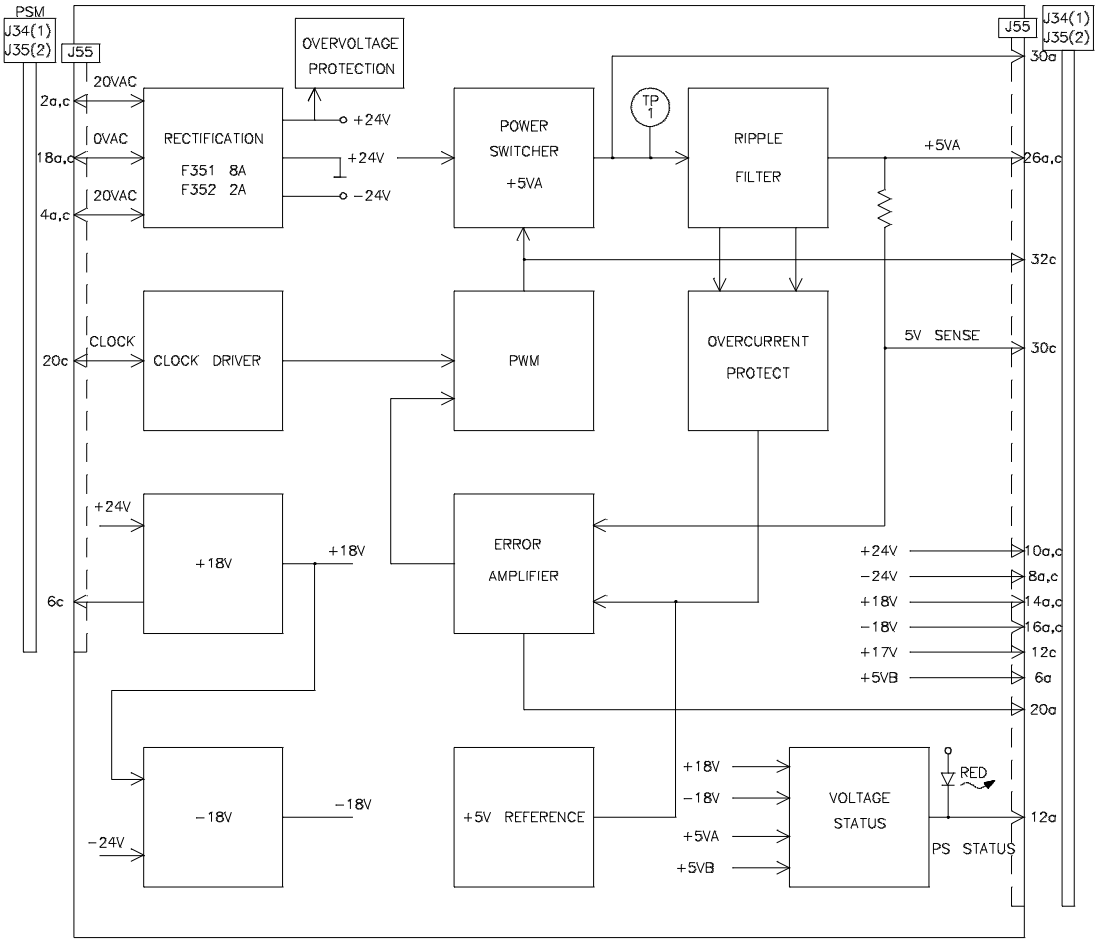

Figure 51 **Board Layout - PWS**

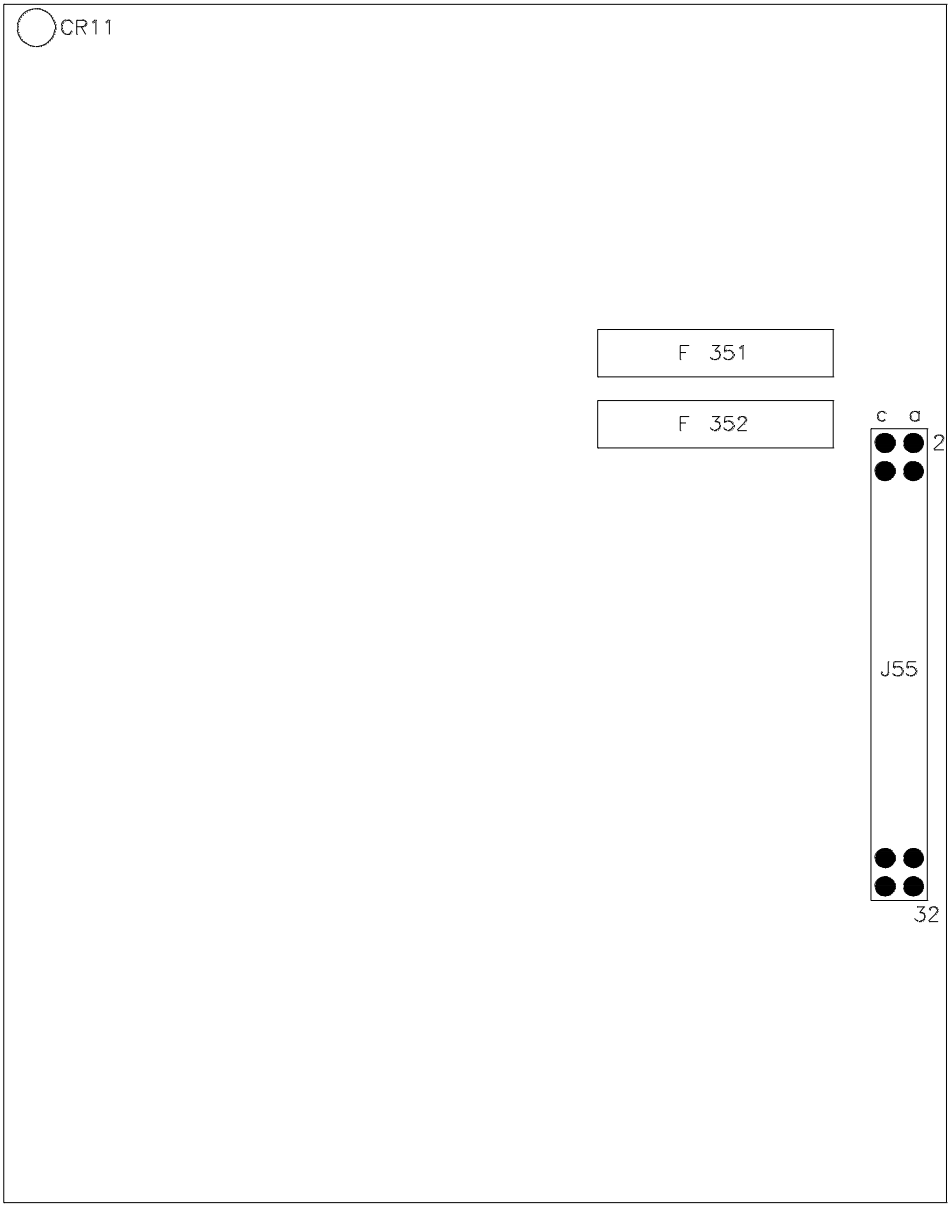

Power Supply Control Board (PSC)

The Power Supply Control Board (PSC) provides several DC voltages. +36 VDC are rectified from 30 VAC, fused with F14 (5 A) and filtered (Rev. A only). Capacitor C53, 40 mF, is physically mounted on the PSM. ±17VDC are rectified from 2 x 15 VAC and fused with F15 and F16 (2 A) respectively. +5 V_B is derived from +17 VDC. This is the only regulated voltage that is present as long as the line power switch is turned on. It is used for starting up the power supply and for powering some parts of controller memory . +12 VDC is derived from +17 VDC, -12VDC is derived from -17 VDC. The presence of the ±12 V is dependent upon the state of the SLEEP signal. With a SLEEP signal set high, the output of the +12 VDC regulator drops to approx. 1 V. This causes the output of the -12 VDC regulator to drop to approx. -1 V.

The Clock Generator contains an oscillator with a frequency of roughly 22.5 KHz. This clock drives the Power Switcher Circuit of the Switching Power Supply for the +5 V_A on both PWS boards. It is free running during starting up and will be synchronized in normal operation with a 22.5 KHz cycle frequency if the Diode Array Detector (DAD) is installed. There is no synchronization with the Filter Detector.

The Voltage Status Circuit provides two signals. First it checks the -12 VDC for a low limit and produces a status signal. This signal, combined with the status signals of the two PWS boards, results in the PS STATUS signal. Second, the +17 VDC is checked for a low limit, which, when true, results in a POWER FAIL signal. Both signals are supplied to the controller.

The Zero Cross Pulse Generator provides a short pulse whenever the line voltage returns to 0 V. This signal (ZCP) is used to synchronize the switching of the External Contacts (ECI) and the High Pressure Pump. Operation of the heater also requires pulses. The rate of these pulses (ZCP HEATER) is depending upon the operating line voltage. When the jumper J65 is set to 220/240 VAC, the number of pulses is the one of ZCP divided by 4.

The High Pressure Pump is turned on upon controller request (PUMP ON) and with the presence of the ZCP signal. A oscillator modulates this pulse in amplitude such that at least three pulses appear during the length of the original signal. These pulses guarantee a correct start of the pump motor (PULSE TRAF01, PULSE TRAF02).

The Control Logic determines the operating mode of the complete Power Supply and hence the operating mode of the HP 1090 system. The key signal is the SLEEP (or its corresponding signal), deciding whether the Power Supply is in POWER OFF or POWER ON mode.

After turning the Line Power Switch to on, +5 V_B, +17 VDC, -17VDC and +36 VDC are established immediately. All circuits using the above listed voltages are operating. With a resistor network (R 532) a capacitor (C53) is charged. During the charge-up, the SLEEP signal goes to TTL high state. Therefore, the Power Supply always enters the POWER OFF state after initial turn on.

The transfer to POWER ON state can be initiated in two ways, either using the push-button at the System Keyboard or using the REN signal. Pressing the key POWER ON provides a TTL Low signal at the POWER ON line. SLEEP falls to Low. All regulated voltages are generated, the fan turns ON and the HP 1090 system goes into POWER ON state.

With an additional signal any disturbance coming in on the GTS line which would switch the Power Supply back to off is inhibited. The transfer described above from POWER OFF to POWER ON can also be initiated with the REN signal.

The transfer to POWER OFF is only possible upon HP 1090 controller request. This request is the GTS signal. This sets the SLEEP signal to high and all regulated voltages are turned off. The complete HP 1090 system goes into POWER OFF state.

PSC Revisions

Revision A

This revision has all the features described above.

Revision B

Revision B has a complete new layout. Therefore, all reference designators have changed. However, this board is compatible. There are some new circuits on this revision as well. + 36 VDC is now a regulated voltage. It is only available in POWER ON state. Also all fuses are on the AC side. The Voltage Status circuit also checks +36 VDC and +12 VDC for exceeding an upper limit.

Revision C

Only the location of two resistors used in the Voltage Status circuit has changed.

Revision D

For better temperature stability in the heated column compartment a capacitor was added and one resistor changes its value. Also a resistor in the Voltage Status circuit changes.

Revision E

Some minor changes on components.

Revision F

Current revision.

NOTE

HP 1090 instruments with serial numbers G00304, 328, 334, 336, 338, 339, 341 to 345, 347 and higher have a new transformer (01090-61103) installed. All A-serial number instruments were upgraded to 01090-61103.

Whenever a new transformer is to be installed, make sure that a Power Supply Control Boar d (PSC) with Revision B or higher is present in the Power Supply.

The new transformer (01090-61103) provides a higher AC voltage on the 30 VAC winding.

Figure 52 **Block Diagram - PSC Revision A**

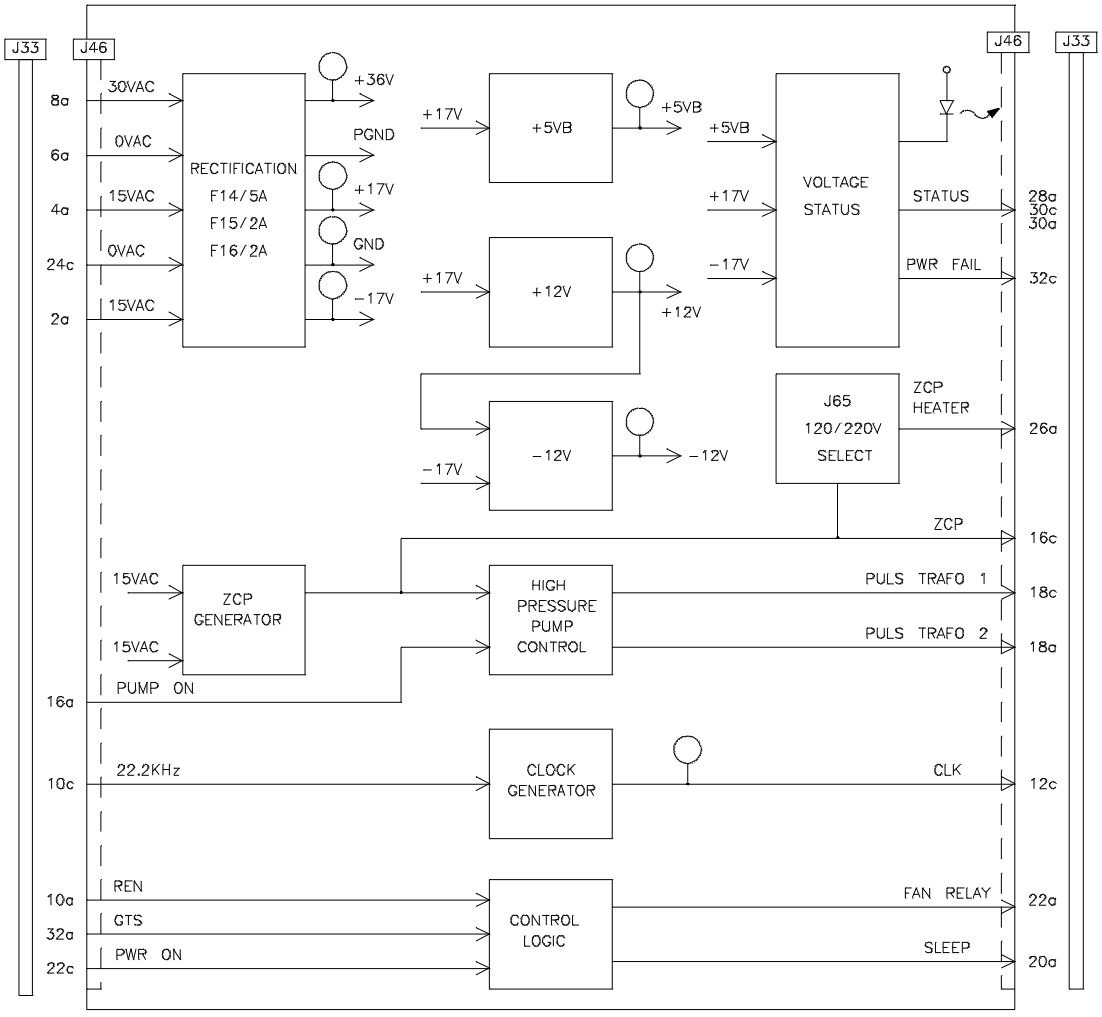

Figure 53 **Board Layout - PSC Revision A**

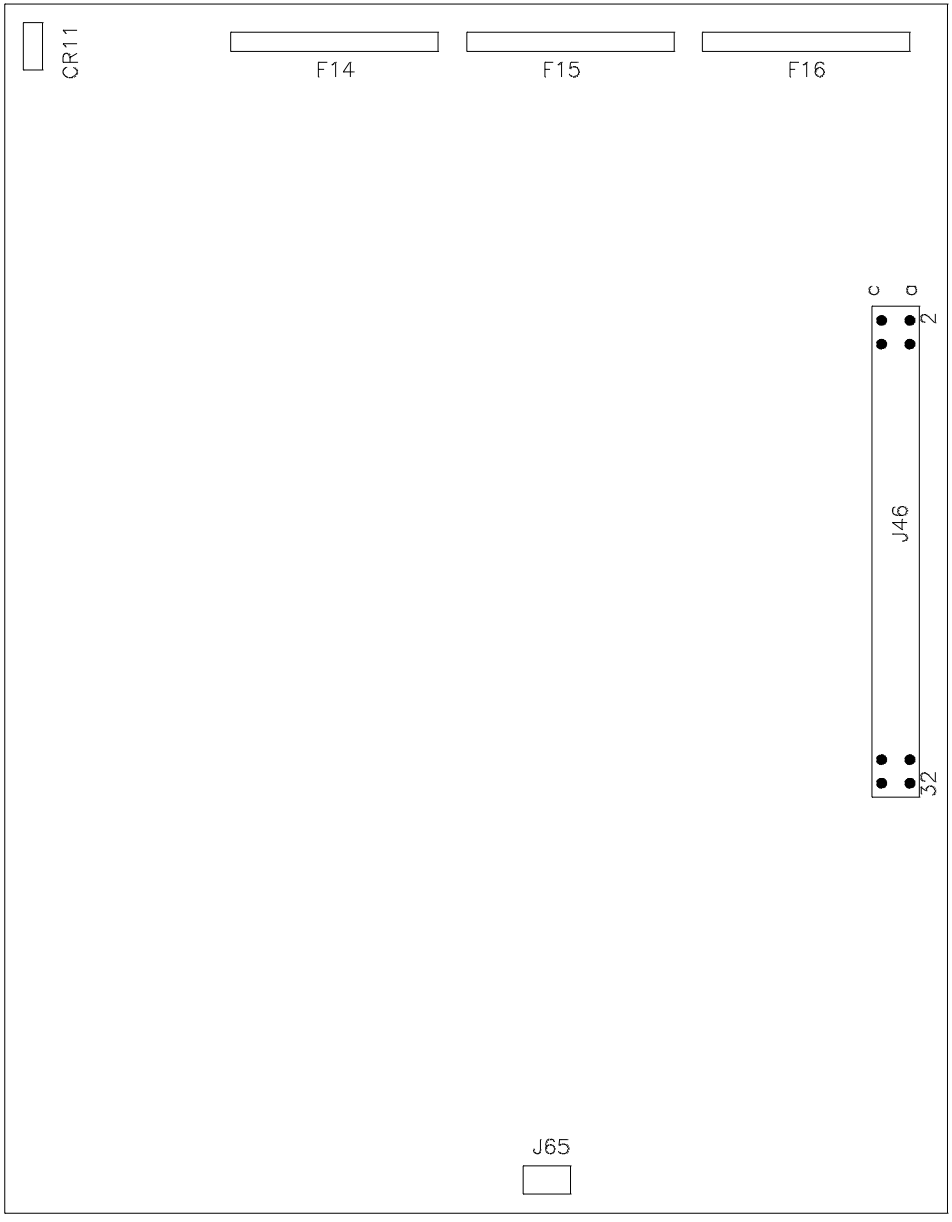

Figure 54 **Block Diagram - PSC Revision B and higher**

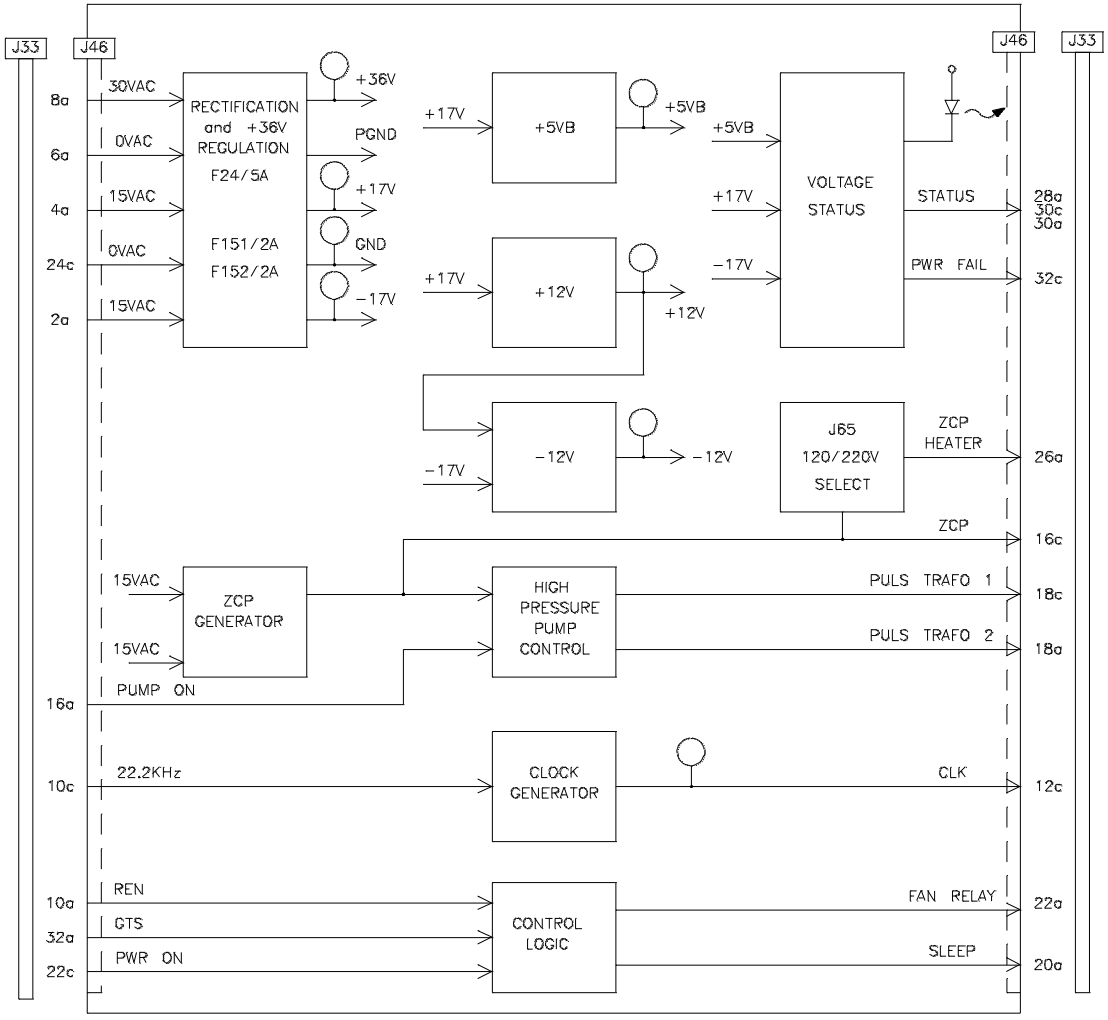

Figure 55 **Board Layout - PSC Revision B or higher**

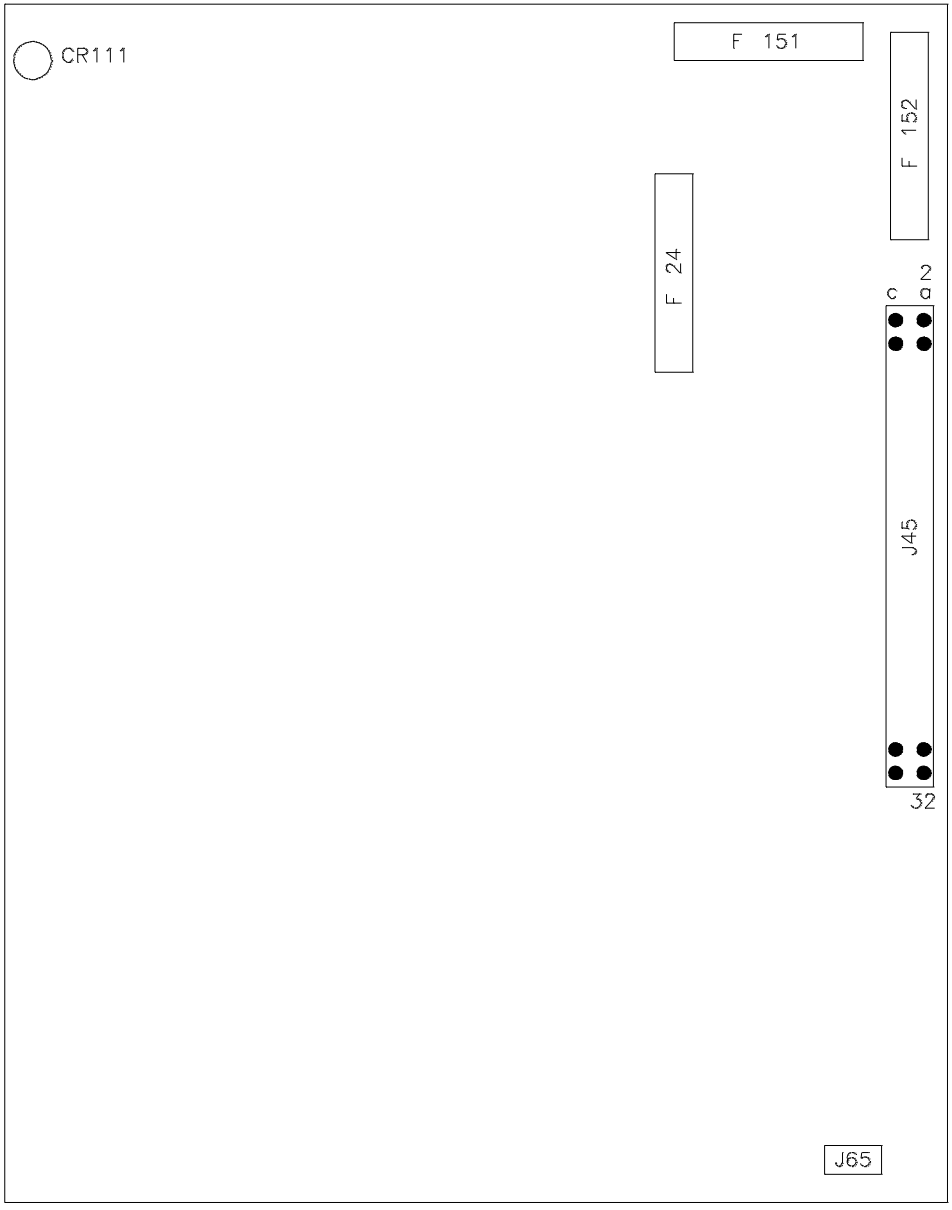

Power Supply Mother Board (PSM)

The following boards plug onto the PSM:

Power Supply Control (PSC)	J33
Power Supply (PWS)	J34, J35

Components located on the PSM:

C53, R54, R55

Connections are made from PSM to:

Power Transformer	J21, J41
Controller Motherboard (CTM)	J12, J22
SDS Motherboard (SDM)	J32
Detector Motherboard	J42
External Contacts Board (ECI)	J52
Primary Board (PRI)	J62

NOTE

On revision B PSM board the value of the capacitor C53 has been changed from 40 mF to 22 mF/75 VDC.

Figure 56 **Board Layout -PSM**

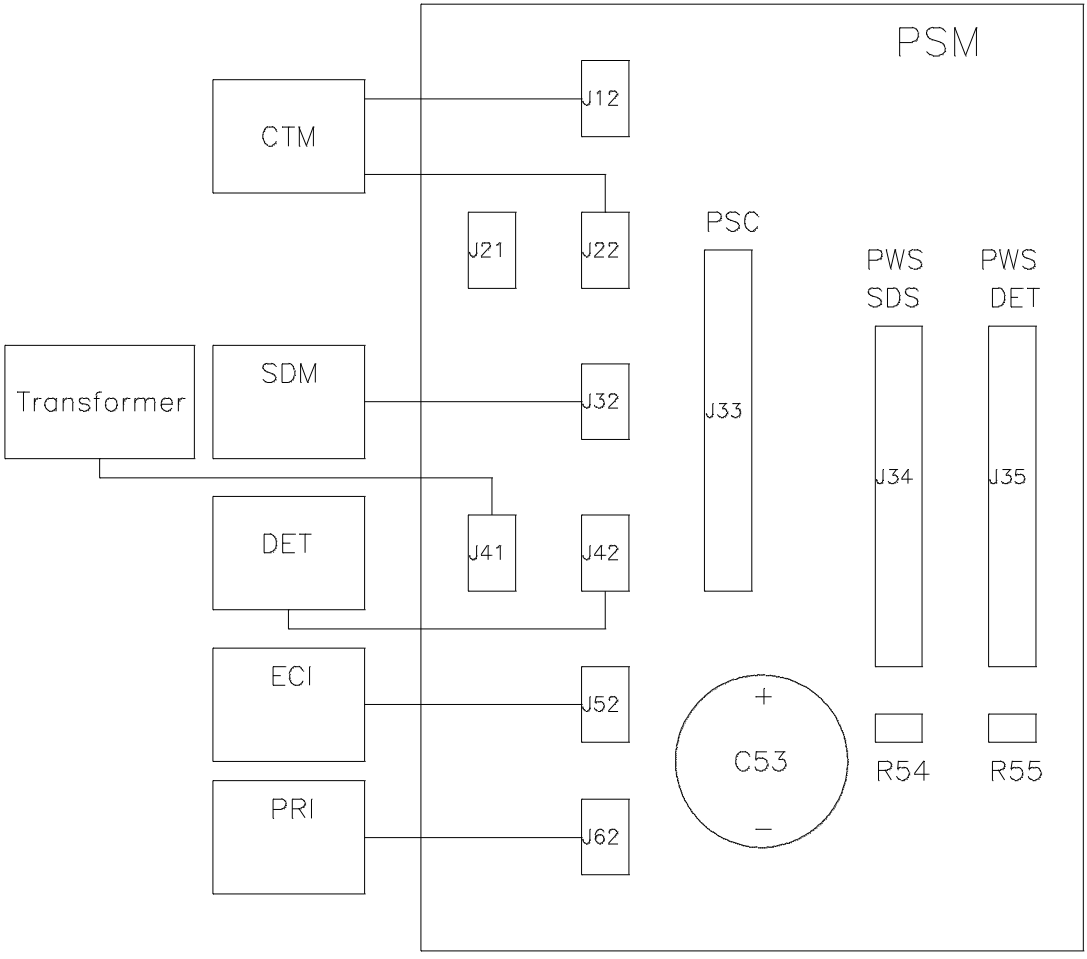

Instrument Conversion

HP 1090 systems are manufactured and tested in the configuration that has been ordered. This is true for number and type of modules that have to be installed and also for the line power setting. Therefore, no adjustment of the system to line power is required during installation. However, if there is a need for conversion, the following point should be noted:

NOTE

The only adjustment that can be performed by the customer is to switch from 100 VAC to 120 VAC (or vice versa) and from 220 VAC to 240 VAC (or vice versa). This only requires the change of the setting of S1 on the Primary Board, which is available at the rear of the HP 1090.

Line Conversion Procedure

In case a change from low range (100 VAC/120 VAC) to high range (220 VAC/240 VAC) or vice versa is required, or if the rating of the frequency of the line voltage is changed, the following changes must be made.

1. Set switches S1, S2 on Primary Board (PRI) according to available line voltage, refer to “Primary Board (PRI)” on page 100.
2. Install correct line fuses, refer to “Primary Board (PRI)” on page 100.
3. Install correct line receptacle with built-in line filter, refer to “Primary Board (PRI)” on page 100.
4. Set jumper J65 to correct position on Power Supply Control Board (PSC). Refer to “Power Supply Control Board (PSC)” on page 116 and “Oven Interface Board (OVI)” on page 282.
5. Set switch S1 on Oven Interface Board (OVI) to correct position (refer to OVI board lay out, Column Compartment section).
6. Install correct starting capacitor (C1) for the High Pressure Pump. This capacitor is installed inside the HP 1090 mainframe on the power supply rear panel, refer to “Primary Board (PRI)” on page 100.
7. Install correct High Pressure Pump Motor, refer to “Primary Board (PRI)” on page 100.

8 Depending on line frequency the correct gear has to be installed on the High Pressure Pump Motor.

NOTE For parts refer to “System Conversion” on page 357.

7

DR5 Solvent Delivery System

Pumping System

The HP 1090 Solvent Delivery System (SDS) is based on a concept which physically separates the essential functions a solvent delivery system has to fulfill. Metering of solvent and delivery to the high pressure side are performed by two different pumps which are coupled together on line. On the low pressure side a syringe-type pump takes in the solvent from a reservoir and meters it to a point from where it is transferred into the high pressure pump. This high frequency membrane pump, which can generate pressures up to 400 bar, delivers the solvent via a high pressure damper to the injection system and to the column.

The basic (isocratic) system consists of a metering pump comprised of two servo driven syringes. The servo controlled variable reluctance motor drives two threaded spindles in opposite directions. The piston on the backward stroke draws solvent from the bottle; the piston on the forward stroke meters and delivers the solvent from the solvent container to the high pressure pump. The sapphire pistons ride up or down the spindles on ball-screw bearings. Each piston has a stroke volume of 100 µl. One step of the servo drive moves each piston 0.7 µm, displacing 7 nl. A microprocessor controls all flow rates from 1 µl/min to 5000 µl/min, in multiples of this step. The pressure generated by the metering pump does not exceed 6 bar, which ensures that solvent metering is effectively independent of solvent compressibility.

A 4-port, motor driven rotary valve connects the syringes alternatively with the solvent reservoir for solvent intake and with the system for solvent delivery. When the piston on the forward stroke reaches the end of a cylinder, the control system waits for the pressure stroke of the high pressure pump. Then it stops the servo drive and turns the switching valve through 90 degrees, reversing the connections of the pistons.

The servo drive is restarted, running in the opposite direction. This process, which is completed in maximum 50 ms, generates a flow with no fluctuations.

The flows of the individual solvents are then assembled in a chamber, which on one side is confined by a flexible membrane. This chamber acts as a compliance between the low and high pressure side and simultaneously serves as the mixing chamber. The pressure at this point, under normal conditions, lies between 2 and 4 bar.

Figure 57 **Block Diagram SDS**

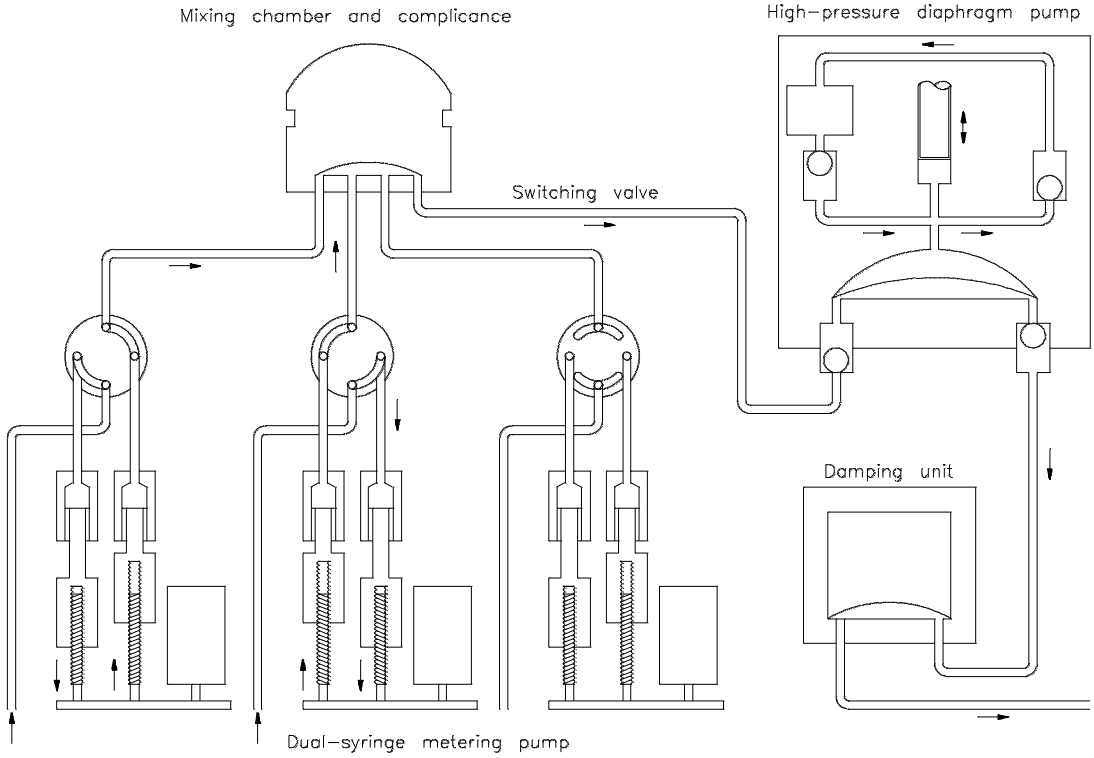

The high pressure pump produces the flow through the column. At the end of the delivery stroke the membrane is pressed flat against the pump head by the oil on its other side. While the piston starts to travel backwards the solvent contained between inlet and outlet valve expands and the pressure drops. When this pressure has arrived at a value which is about one bar below the pressure in the compliance chamber, the inlet valve opens and solvent flows into the pump head's cavity, forcing the membrane to bend towards the oil section. As soon as the piston reverses its movement the inlet valve closes and pressure is built up until the system pressure is reached.

The outlet valve then opens and all the solvent between membrane and pump head is delivered to the system. While the piston keeps travelling until it reaches its lower position, further pressure is built up in the oil above the membrane, which finally is released via the override valve to the oil reservoir. Since the piston stroke volume is substantially larger than the maximum volume delivered to the system per stroke, the balance is filled by oil taken

from the oil reservoir through a check valve. This happens as long as the piston, after reaching its lower position, travels back and the inlet flow is lower than the oil flow created by the piston.

Though the high pressure pump works at a frequency of 10 Hz pulse damping is still necessary. This is achieved by the high pressure damper which in essence is a reservoir filled with a compressible liquid, separated from the solvent by a membrane. This reduces the pressure ripple to less than 2% of the system pressure which is also measured in this item.

Solvent Preparation System

The HP 1090 is equipped with a helium degassing system. Helium gas, from a station or a gas container, must be connected to the left hand rear of the mainframe. Gas flow is switched on or off with a manual valve. Flow for degassing must be adjusted with an external regulation, since no provision is made inside the HP 1090 system. Maximum inlet pressure is limited to 5 bar. Recommended flow rate is 100 ml/min for 15 minutes and 10 ml/min for continual purge.

In the isocratic configuration shown below, helium enters the inlet manifold through a built-in filter. A connection is made to the bottle holder system with a single tubing from inlet manifold. A built-in restriction avoids different gas flows through each single bottle filled with liquids of different viscosit y and/or different solvent levels with case of binary or ternary system configuration. Outlets that are not used are blocked with a screw.

The helium enters the solvent bottle through a sintered glass filter, and leaves through tubing to a manifold. Outlet to an external fume hood is checked with an overpressure valve which opens at an overpressure condition of approximately 0.2 bar to release the helium into the main air flow that leaves the HP 1090 mainframe.

Upgrade from isocratic to binary or ternary requires installation of bottle holder, solvent inlet and helium filters, solvent inlet capillary and helium tubing for each channel.

CAUTION

Helium supply must be turned off via the HP 1090 valve, and not just at the helium source! Failure to do so may cause solvent to be siphoned back to the helium valve, and even to the helium source.

Three additional connectors can be used to supply external bottles with helium from the inlet manifold. Those bottles have to be connected directly to the fume hood since the outlet manifold has only three connectors.

Figure 58 **Solvent Preparation**

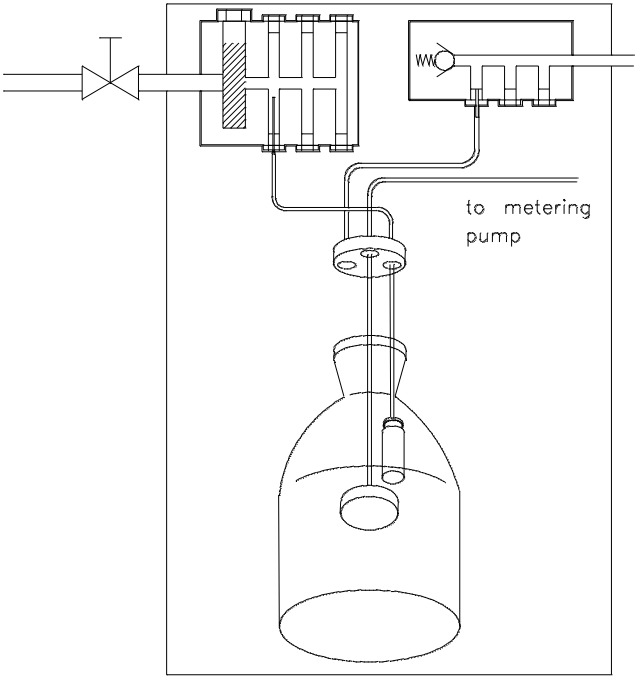

Leak Detection System

The HP 1090 is equipped with a leak sensing system that prevents damage to the instrument and informs the operator about a serious leak condition in the system.

Figure 59 **Location of Leak Sensors**

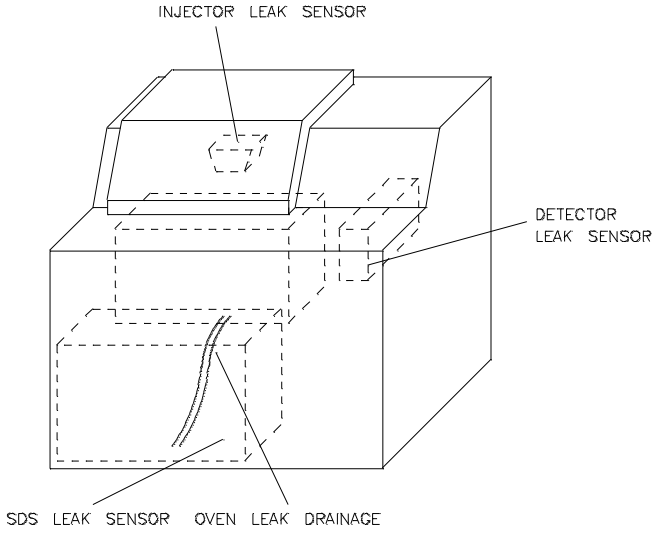

Leaks in the solvent delivery system (SDS) are detected with a sensor placed at the lowest point of the SDS compartment. After leak correction, the bottom plate and the location of the leak sensor must be cleaned and dried since there is no waste exit.

NOTE Solvent from leaks in the column compartment is gathered with a collecting tray at the bottom of the oven compartment and then flows out to the SDS sensor. Therefore a leak indicated from the SDS leak sensor circuit may be from either location.

The injection system is protected against uncontrolled solvent flow caused by leaks with a waste sump underneath the switching valve unit, the metering unit and the needle-seat unit. Solvent resulting from leaks in this area is collected at the lowest point of the sump and the sensor is activated. A waste capillary leads from the waste sump to the rear of the instrument. However, the leak sensor has to be dried after a leak occurred.

Solvent flowing out of the metering syringe during a wash cycle also goes into the sump, however it bypasses the leak sensor and is channeled directly to the waste outlet.

The built-in detector has a leak sensor installed inside the cell compartment to monitor leaks of the cell and capillary connections. The cell compartment also has to be dried after leak removal.

When a leak has been corrected and the pump re-started, the mainframe controller allows 2-3 minutes before resumption of leak message polling. This is to allow the leak sensor time to dry.

Metering Pump and Rotary Valve

NOTE For metering pump and rotary valve parts refer to Parts Identification.

The metering pump system is driven by a variable reluctance motor (servo) electrically controlled by the Metering Channel Driver board (MCD). Feedback about actual movement is sensed by a shaft encoder, mounted on top of the motor. In order to achieve required flow resolution a gear is used to transmit motor movement to the two pistons. The sapphire pistons, moving inside the solvent filled chamber in the upper part of the pump, are ball loaded on the threaded spindles which transfer the circular movement of the gear into a linear movement of the piston. The built-in spring prevents clearance affecting flow accuracy. Piston movement is guided by a sapphire ring. The capillaries leading from the metering cylinders to the rotary valve have a constant slope to ease pushing out air bubbles from the metering cylinders. The four port rotary valve is also driven by a variable reluctance motor controlled by the MCD board. Final position feedback is provided by a light switch sensor.

Table 16 Technical Data - Metering Pump

Metering Pump	Resolution of Mechanical System	6.66 nl/Step of Encoder
	Resolution of Encoder	0.25 degrees
	Lowest Frequency	2.5 Hz
	Highest Frequency	12.5 KHz
	Number of steps between dead points	16 000
Rotary Valve	Switching Time	approx. 40 ms
	Rotor Diameter	7 mm
	Stator Diameter	14 mm
	Pressure Range	0 to 8 bar
	Rotor Material	Ceramic
	Stator Material	Ceramic
	Gasket Material	KALREZ

NOTE

The gasket used in the rotary valve is made of KALREZ™ (KALREZ is a registered Trademark of DuPont fluorocarbon products), a perfluoroelastomer resistant to most chromatographic solvents. Table 17 lists the solvents which are not recommended for use with KALREZ.

Table 17 **KALREZ™ Solvent Suitability**

Solvent	Rating
Carbon Tetrachloride	NR
Ethylene Chlorohydrin	NR
Formic Acid, 12%	NR
FREON (partially halogenated)	NR
FREON (fully halogenated)	X
Nitric Acid, 70%	OK
Trichloroethylene	NR
Trifluoroacetic Acid	NR

NR	Not recommended for use. The gasket may be affected (slight swelling or loss of physical properties).
X	Totally unsuitable for use.
OK	Suitable for use under the conditions specified.

Figure 60 **Metering Pump and Valve**

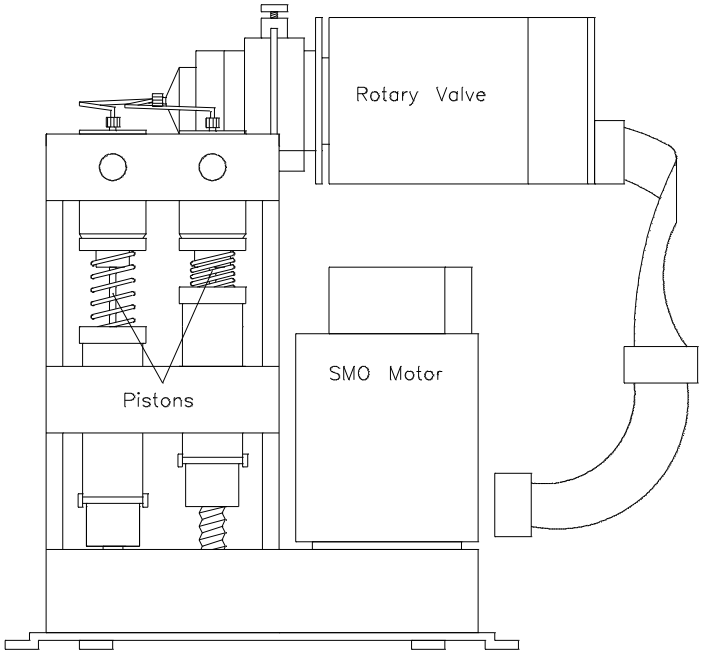

Low Pressure Compliance

The low pressure compliance (LPC) connects the metering pump system to the high pressure pump. The contributions of each channel to the total flow are mixed in the chamber. Since there is a continuous delivery from each channel, no rotating part inside the chamber is necessary. The LPC also temporarily stores the flow volume delivered from each channel for the time the piston of the high pressure pump is on its pressure stroke and no flow can leave the LPC. The pressure produced in this way is checked by a strain gauge system mounted on a measurement spring. Flow volume filling the chamber moves a metal cylinder which bends the spring. An electrical circuit (LPT) transforms the mechanical movement sensed by the strain gauge bridge into an electrical signal which is checked by the controller. The spring is prestressed such that there will only be a change in the output signal when the pressure exceeds 2 bar.

NOTE

The LPC cannot be adjusted or repaired in the field. In case of malfunction or damage, the complete assembly must be replaced.

Table 18 **Technical Data - Low Pressure Compliance**

Diaphragm:	Diameter	16 mm
	Thickness	0.1 mm
	Maximum deflection at 6 bar	0.1 mm
Pressure Range in Operation		2 - 5 bar
Maximum Volume underneath Diaphragm		19 µl + 4 µl
Volume underneath Diaphragm at 5 ml/min		5 µl + 4 µl
Dead volume		4 µl

Figure 61 **Low Pressure Compliance**

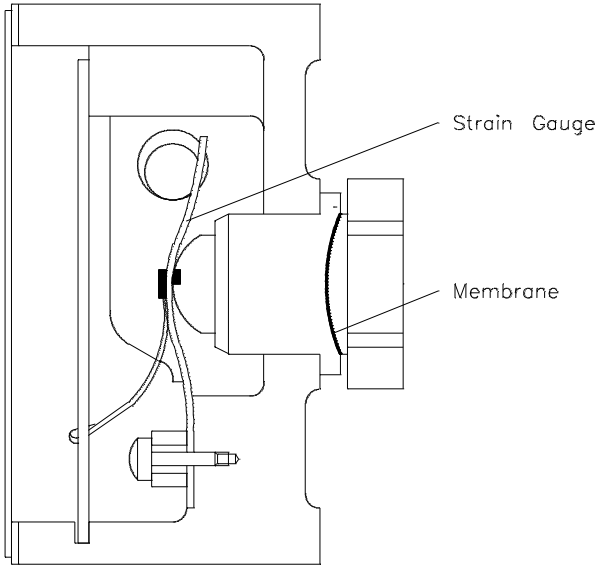

High Pressure Pump

The high pressure pump is driven by an electrical motor connected to line voltage. Two different motors are available depending upon line voltage. In addition the transmission factor has to be different when working with 50 Hz or 60 Hz frequency.

The circular movement is transmitted to the gearbox where a cam moves in an oil-filled chamber. At the lower end of the cam the metal piston is mounted in a spring and ball system. The piston is moving in a guide in the oil-filled system. This high pressure section of the oil system is connected to the oil reservoir with the oil inlet valve and the override valve. A drain also leads from the upper end of the guide into the oil reservoir. A magnet inside the oil reservoir gathers metal particles in the oil system to prevent any excessive wear.

Solvent ball valves are mounted from underneath the pump to the lower end of the pump head. Seen from the front of the HP 1090 the left hand ball valve is the inlet valve. A filter sieve is used in conjunction with the inlet valve, so it protrudes from the pump head more than the outlet valve.

Table 19 **Technical Data - High Pressure Pump**

Oil Stroke Volume	21.6 µl
Piston Diameter	2.5 mm
Stroke Length	4.4 mm
Cavity Diameter	16.5 mm
Cavity Volume	32 µl
Maximum Diaphragm Deflection	0.12 mm
Maximum Stroke Volume (Solvent)	8.33 µl
Minimum Stroke Volume (Solvent)	167 nl

Table 20 **Specification of the Hydraulic Oil**

Type	Hydraulic Fluid
Composition	Hydrocarbons plus anti-wear additives
Viscosity	124 SSU nominal at 100ºF
Standards	H-LP16 per DIN 51525
Flash Point	+400ºF minim

Figure 62 **High Pressure Pump**

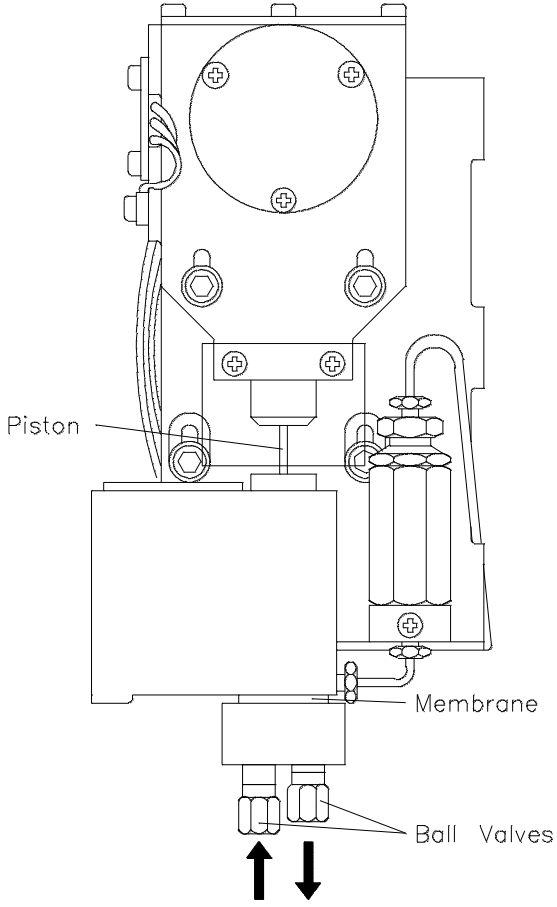

Clamp Assembly (Piston Seal)

Early Designs

In the first version (see Figure 63) the seal sat on the clamp screw and was held by a clamp assembly. As the piston moved up and down oil on the piston was able to by-pass the seal by capillary effects and cause oil leak age.

In the following design the seal is removed and the clamp assembly and the clamp screw were re-designed. The clamp assembly now consisted of three parts including an O-ring which serves just as a guide. The two holes in the screw are drilled completely through it and the center hole is extended to allow oil, which is transported to the space between the clamp assembly and the clamp screw, to flow back through the two holes and the drainage, into the oil reservoir. If the oil reservoir is filled up to 7-8 mm below the cover, the oil level in the clamp screw and the clamp assembly is low enough to allow a maximum pump stroke without transporting oil up into the clamp assembly.

Figure 63 **Piston Sealing Package**

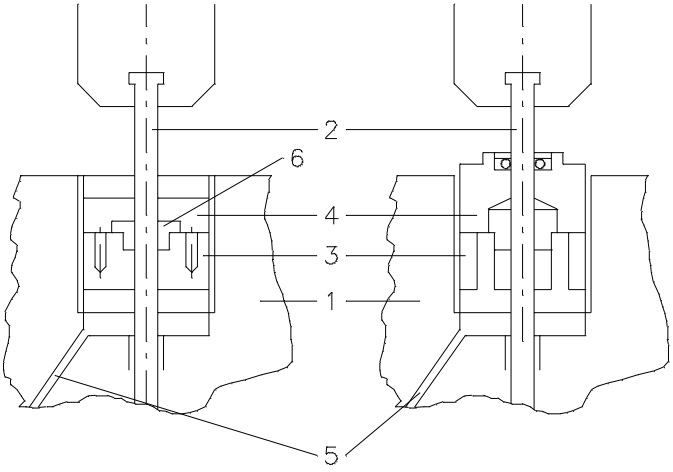

1. Pump body
2. Piston
3. Clamp screw
4. Clamp assembly
5. Drainage to reservoir
6. Seal

As from mid September 1989, all 1090 booster pumps were fitted with a new design of clamp assembly (see Figure 64). This change was implemented with REVISION K pumps.

This clamp assembly consisted of four parts: the clamp body, an O-ring (“quad-ring"), a washer, and a locking ring.

Figure 64 **New Piston Sealing Package**

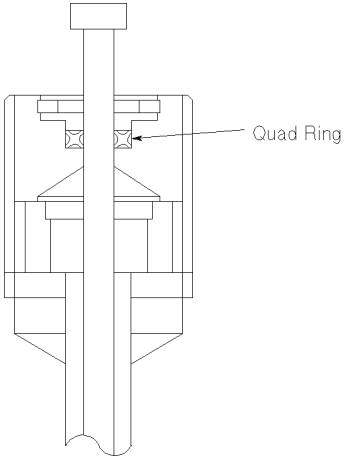

Current Design

History

A major redesign of the clamp assembly has been done to improve the oil seal around the piston. These changes were also done in parallel to design improvements in the pump body. These changes were implemented with Rev. N pumps.

In earlier pump designs, the hole for the piston insert was drilled to tight specifications. However, it was found that the drill hole may be drilled slightly off center. This meant that after assembling the piston insert in the pump body, the piston would travel slightly misaligned. To compensate for this, the tolerances of the holes in the clamp assembly were relatively large. However, because these tolerances are large, in some cases, the seal in the clamp assembly could be drawn between the piston and the hole in the clamp assembly below the seal. This would cause rapid wear of the seal.

Also, when tightening the clamp assembly on top of the block screw, the two parts could move slightly out of alignment, contributing to the overall misalignment of the parts around the piston.

If the clamp assembly was replaced in the field, correct alignment of the pump body to tight tolerance was not possible. This also contributed to misalignment and rapid wear of the seal.

Technical Changes

Only the bottom 5 mm of the hole in the pump body is drilled to tight tolerance. The rest of the hole has a slightly larger diameter. This means that the piston insert must be aligned at the upper end also. This is done by a recess in the bottom of the block screw into which the piston insert fits. To prevent misalignment of the block screw and clamp assembly, the clamp assembly now has a lip which inserts into a recess on the top of the block screw. This ensures alignment is maintained when the clamp assembly is secured.

The clamp assembly was also redesigned. The seal is now an O-ring type. Teflon seals above and below the O-ring form tight seals which prevent oil moving past the piston. The seals are held in position by a brass insert.

NOTE Because the oil seal is dependent on correct alignment of the pump body and piston, the clamp assembly is no longer available for replacement. Alignment of these parts to the required tolerances in the field is not possible. In case of oil leaks around the piston, the complete pump must be replaced.

Figure 65 **Current Piston Sealing Package**

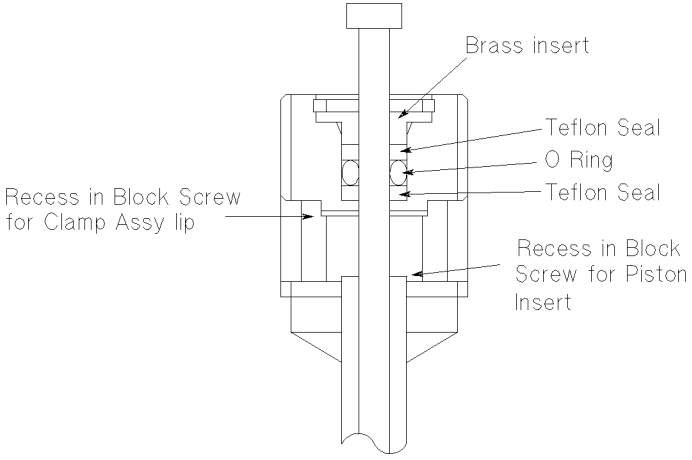

Solvent Ball Valves

The solvent ball valves consist of three (inlet) or two parts (outlet) respectively. Depending upon use, the valve cartridge, including two ruby balls, two sapphire seats, vespels and a spring, has to be inserted into the valve housing in two different directions. When used as outlet valve, the arrow indicating flow direction points towards the valve housing. For inlet operation, a sieve has to be inserted first and then the valve cartridge with the arrow pointing away from the housing. Spring loading of one ball in the valve cartridge is necessary to prevent sucking of solvent from the LPC.

For applications above pH 9.5, valve cartridges and sieves with TEFZEL™ are available which are resistant to pH in the range 2.3 -12.5. I

Table 21 **Ball Valves and Sieves**

Item	Description	Part number
1	Valve Cartridge (pH 2.3-9.5)	79835-67101
	Valve Cartridge pH (pH 2.3-12.5)	79835-67102
2	Sieve (pH 2.3-9.5)	79835-65213
	Sieve pH (pH 2.3-12.5)	79835-65216
3	Valve Housing	79835-25211

Figure 66 **Solvent Ball Valve**

1. Check Valve Cartridge
2. Sieve
3. Valve Housing

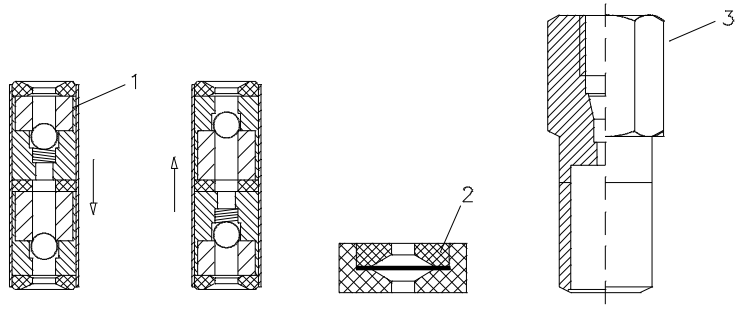

Override Valve

A ruby ball is pressed with a spring on the metal seat with a force representing a pressure of 440 bar. Relief pressure is adjusted setting the top screw. In case of relief oil flows around the ball through a small bore in the housing into the main compartment of the override valve and then out to the oil reservoir through a capillary.

Figure 67 **Override Valve**

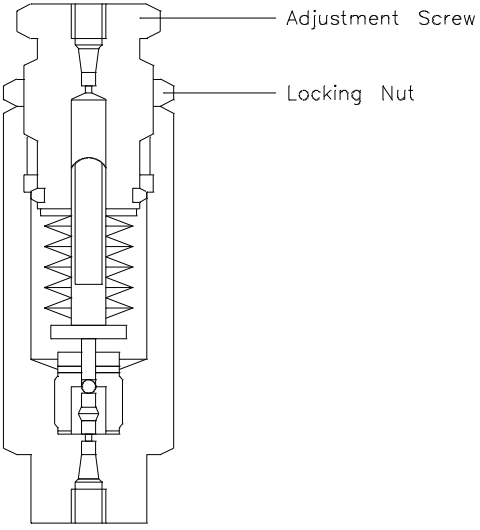

High Pressure Damper

Two functions are obtained from the high pressure damper. Flow is damped (flow ripple reduction) and the high pressure in the system is measured. The damping function is provided by an aluminum housing partly filled with water as the compressible medium and a solid steel block which compensates for different coefficients of expansion of water and the aluminum housing (see Figure 68).

Pressure is measured with a strain gauge bridge mounted on the cylindric tube also filled with water and a solid metal bar. The electrical circuit that outputs a voltage proportional to the pressure measured is mounted on a bracket on the extension of the metal cylinder. A protection plate mounted between cover and housing prevents membrane damage in resulting from pressure excess or pressure shocks.

Figure 68 **High Pressure Damper**

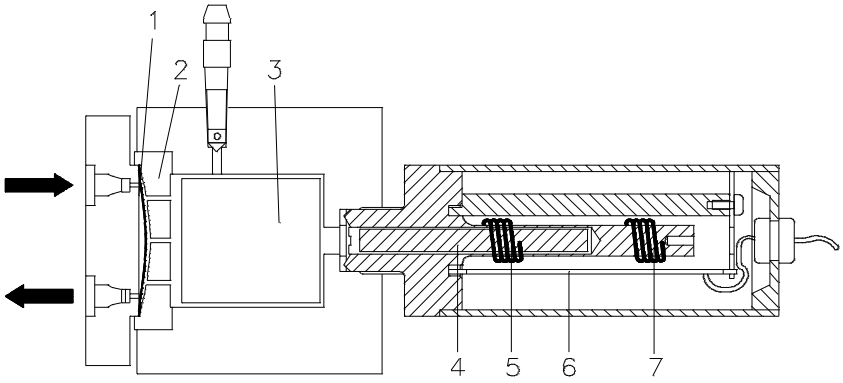

1. Membrane
2. Protection plate
3. Steel Block
4. Steel Rod
5. Sample Winding
6. Transducer Board
7. Reference Winding

Electrical Control

Overview

NOTE To describe electrical control, the circuits of the original boards (MDR/SCT) are used. These circuits are now combined onto one board, the MCD board.

Flow control of the HP 1090 solvent delivery system (SDS) is separate for each channel. Flow will be adjusted according to the setpoints made with FLOW, %B and %C and MAXPRESS@ entries.

Since flow delivery depends on metering pump piston velocity, the servo motor has to be controlled very accurately which is actually done on the servo controller circuit (SCT) on the MCD board. The slave processor on the mainframe controller board (CTL/MCO) sends information to the SCT circuit, where actual movement, sensed by the shaft encoder on the variable reluctance motor, is compared to the setpoints. The resulting error signal is controlling power output to the servo motor provided by the motor driver circuit (MDR) on the MCD board.

Activation of the valve motor is required when one of the two

metering pump limit switches (MPL) indicates that the piston has reached the upper end position. The slave processor, informed via the MDR circuit and Z80A, still keeps the servo running unless the occurrence of the next delivery stroke of the high pressure pump, sensed by the pump stroke sensor board (PSS). Then the slave processor directs the MDR circuit to activate the valve motor. After switching is completed, sensed by the rotary valve sensor (R VS), the slave processor again controls movement of the servo motor, however in the opposite direction. Since, due to stopping the servo motor, a lack of flow volume occurs, speed of the servo motor has briefly to be increased to add the lacking volume within the next 50 ms (filling stroke). With this procedure no flow volume is lost.

Pressures are measured in the low pressure compliance (LPC) with the low pressure transducer (LPT) and the high pressure damper with the high pressure transducer (HPT). Readings are displayed in the appropriate screen (HP in bar, two LP measurements in numbers without unit). Readings representing pressures between 3.8 and 6 bar from the LPC result in a flow reduction.

Pressure values above 6 bar will shut down the SDS, indicating an error condition. Flow reduction is also forced when the pressure increase, measured in the HPT, exceeds 20 bar/s. The process of flow reduction causes the flow setpoint to be decreased. Next the controller increases the setpoint according to functions stored in its memory to slowly approaching the programmed setpoint. The SDS will be switched off when the high pressure reading exceeds the limit specified by the operator.

A leak sensor is positioned at the low est point underneath the SDS. Leaks from the SDS as well as from the column compartment are sensed. In case a leak occurs, the PTC resistor, working as the leak sensor, provides a signal to a leak detection circuit on the MCD for channel A. There a status signal is generated, which, set true and read by the controller, will cause the SDS to be switched off and will cause a display of a respective error message.

NOTE

In early instruments, the MDR and SCT circuits were on separate boards (MDR board and SCT board). Later, these two boards, were combined onto the MCD board.

Function of SCT Circuit

- Sense the actual servo position. Compare the actual servo position with the servo setpoints and calculate the error. Produce the servo command word based upon this error.
- Transmit its own status to the MDR Circuit for eventual transmission to the MCO.
- When in channel A, act as a conduit for the SDS analog signals HPT, PSS and LPT.

Function of MDR Circuit

- Drive the servo motor under SCT control and the valve motor under slave processor control.
- Control the dynamic lights witches.
- Transmit SDS status to MCO; it's own plus two from SCT circuit.
- When in channel A, act as the SDS leak sensor and transmit leak information to MCO.

Function of MCD

Combines all functions of SCT and MDR onto one board.

Communication and Command Lines

Figure 69 on page 150 and Figure 70 on page 151 show the main communication and command lines in the SDS.

Figure 69 **Block Diagram - Electrical Control**

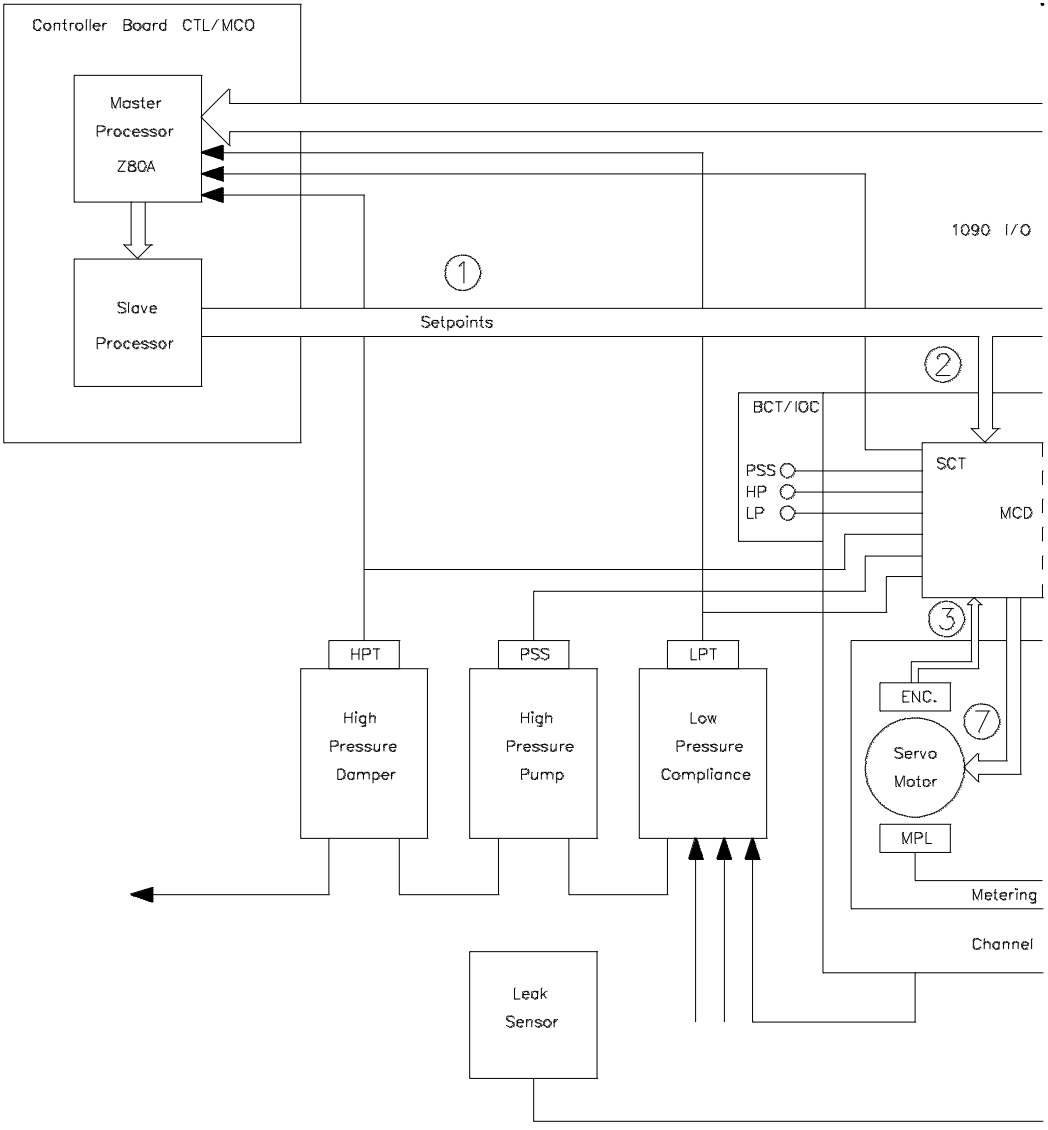

1. Speed/direction setpoints for SCT and MDR. “Servo or Valve” decision bit.
2. Speed/direction setpoints for servo motor.
3. Actual speed/position of the servo motor, 0.25 degrees resolution.
4. “Switch valve” command; left, right or off.

Figure 70 **Block Diagram - Electrical Control**

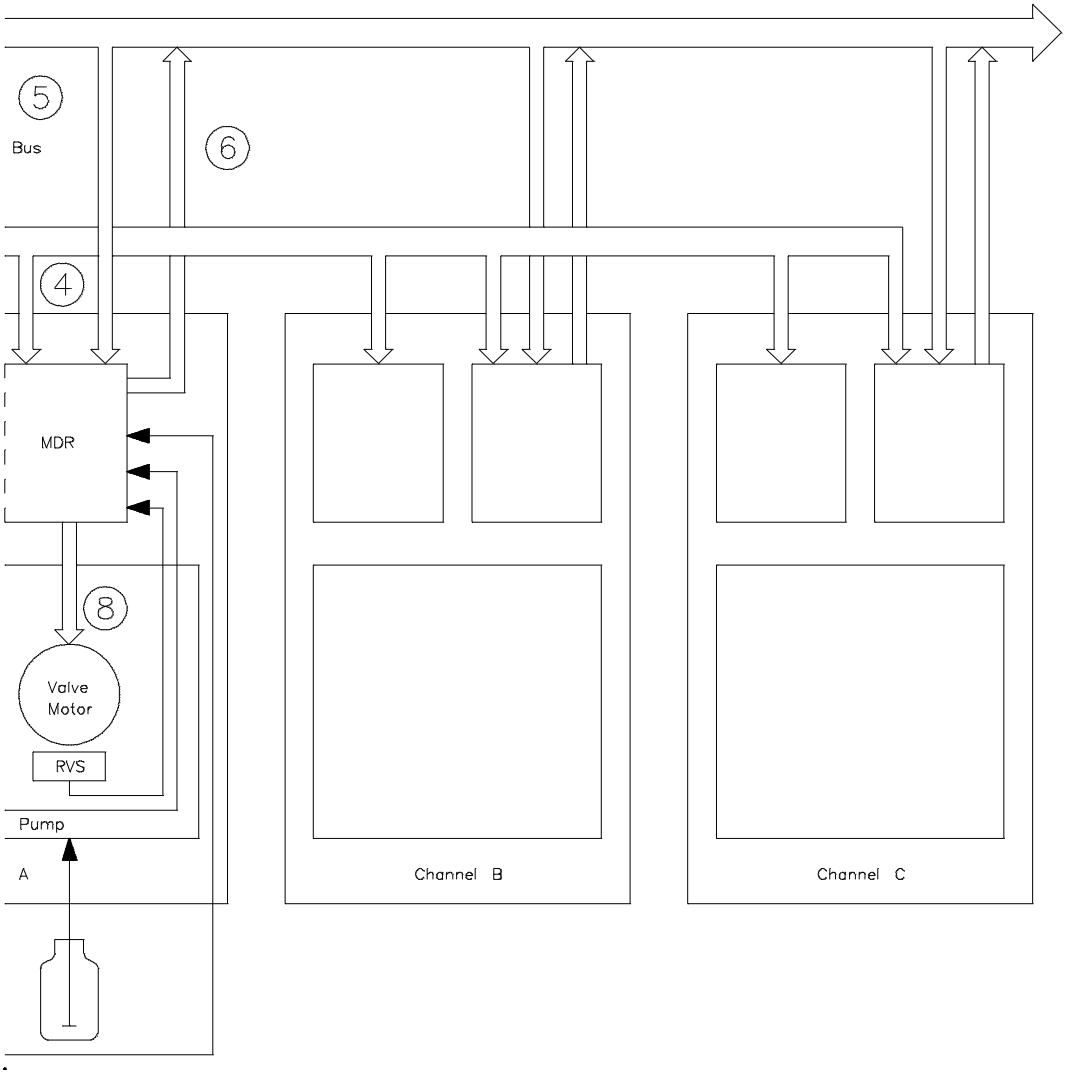

5. Channel select information and SOK.
6. Status, lights witch and leak information.
7. Power to servo.

Metering Channel Driver Board (MCD)

This board combines the function of the obsoleted SCT and MDR boards. The control functions of the SDS electronics have been summarized in one single integrated circuit. However, for clarity, the SCT and MDR circuits are described individually below.

Servo Controller Circuit (previously on SCT Board)

NOTE

The SCT board 79835-66514 is now obsolete. The functions of this board are now located on the MCD board 79835-66521. For upgrade use kit 79835-68722 which contains the MCD board 79835-66521 plus the SIC board 79835-66520.

The control and commutation circuits of this board are specifically designed for a three phase reluctance motor with a 360 slit three channel shaft encoder. It is used for motion control of the metering pump drive system in the solvent delivery system (SDS).

The SCT interfaces with the HP 1090 controller via the HP 1090 I/O Bus. The controller board (CTL/MCO) does reading of light switches and related decisions with the Z80A. Command counters and control signal generation are implemented in the slave processor on the CTL/MCO.

The SCT board can be divided into eight basic functional groups:

- Quadrature Decoder
- Actual Position Counter
- Command Position Register
- Velocity Detector
- Adders
- Pulse Width Modulator
- Commutator
- Status Control

Figure 71 **Block Diagram - SCT Board**

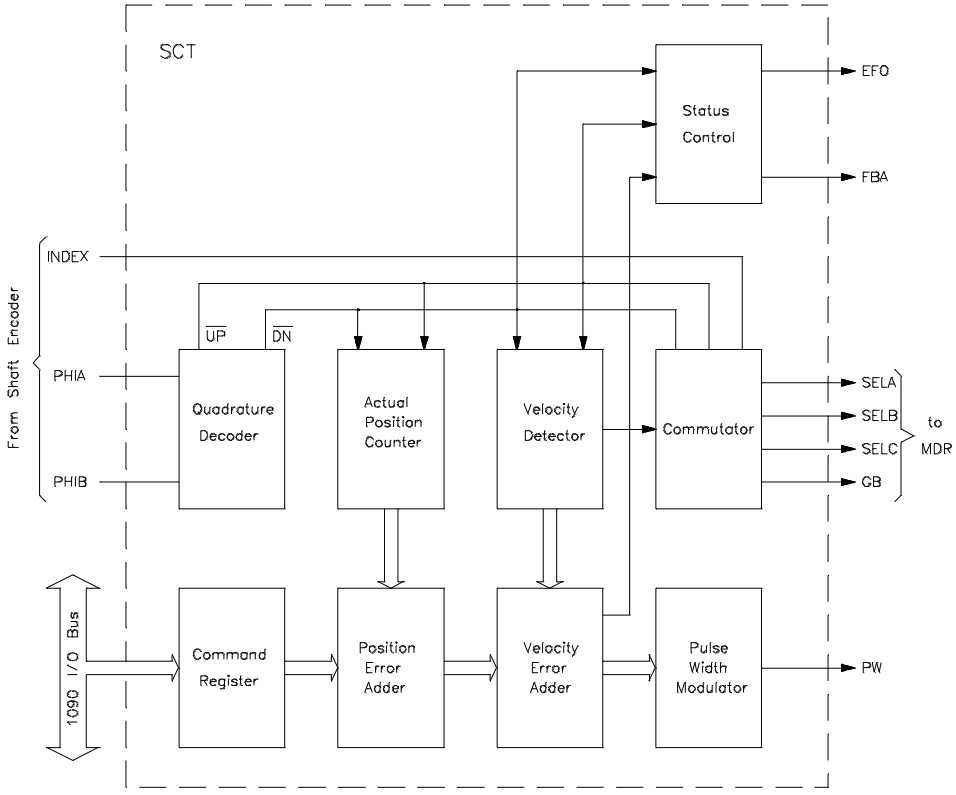

Quadrature Decoder The quadrature decoder receives the two digital quadrature signals PHI A and PHI B from the shaft encoder and produces either an UP or DN pulse on each quadrature transition.

Actual Position Counter UP and DN pulses are used to count in an up, down fashion so that the absolute shaft position can be determined. A 12 bit coded information is provided by this circuit.

Command Position Register In a closed loop system there must be a position error signal if the motor is to be commanded to move. The setpoint data are loaded into registers from the slave processor. The 12 bit command is entered as two 8 bit words, whereby bits 5 through 7 of the high byte word are not used and bit 8 is a reset signal.

Velocity Detector For stability in a closed loop system some form of feedback is necessary . With the SCT this feedback is derived from velocity . The velocity is computed in a difference manner by counting the number of encoder states

over a fixed period of time. In hardware this is accomplished through the use of an eight bit counter which creates a pulse at a fixed rate. These pulses are used to clear another set of up/down counters that are connected to the decoded UP/DN signals. This gives a number which is the number of slits that have been counted over the sample period and is proportional to the velocity. The velocity is used for both, feedback in the closed loop for the velocity error adder and for advances in the commutator circuitry.

Adders

There are two sets of adders. One is used to derive the position error, while the other one adds the velocity to the position error to achieve the motor command word. Two 12 bit words are fed into the position error adder. These are the position command word from the command register and the actual position word from the actual position counter. Since the controller tries to keep the error close to zero, incrementing the command register will result in decremented position counts by DN pulses and vice versa. The four least significant bits of the adder output form the least significant bits of the motor command word and are routed directly to the Pulse width modulator.

The most significant bits are connected to the velocity error adder. They are added to the 8 bit information delivered from the velocity detector. The output of this adder forms the most significant bits of the motor command word. The least significant 8 bits of the motor command word run to the pulse width modulator. The most significant 4 bits are decoded and used for saturation of the pulse width modulator.

Pulse Width Modulator

The pulse width modulator consists of an eight bit latch which freezes input data before they are loaded into two up/down counters. After loading, counters are started if data are not equal to zero. The counters are incremented or decremented depending upon the logic level of the most significant bit. Counting frequency is 1 MHz. This gives 1 microsecond pulse width for one error state. Since the switching frequency is 25 KHz and the maximum output is defined at 80% duty cycle (D.C.) saturation is reached with 32 error states.

With more than 40 error states the output signal would be permanently high. This is prevented by adding a 80% D.C. signal (power limit) to the counter output signal. In addition there is a saturation input that allows to override the output of the pulse width modulator to generate a 80% DC output.

Commutator

Since the board was designed for use with a variable reluctance motor, some means by which to commutate the motor must be made. Commutation on this board is accomplished by the use of a ring counter that has two sub-rings and a PROM which contains the commutation pattern to be used. The ring counter consists of three parts; the minor loop, the major loop and the most significant bit. The minor loop determines the resolution of the commutator

for phase switching and phase advance. The counts of the major loop constitute the lower part of the position information. The most significant bit is separated from the rest of the counter to allow for changes in torque direction. The velocity which was derived from the velocity detector is used to provide phase lead advance for best performance and higher speeds. To improve motor performance phase overlapping was implemented.

This means two phases are energized at the same time. The motor driver board (MDR) has a current regulator which controls the sum of the currents through all motor windings. Switching on two phases results in approximately half the nominal current through each winding which results in only half the power going into the motor. To compensate this, the gain of the MDR is increased by a factor of the square root of 2. This is done by setting a gain bit (GB) at the commutator PROM output when phases overlap.

Status Control

The error overflow (EOF) is derived with an exclusive OR gate from the two most significant bits of the position error adder.

The feedback active signal (FBA) checks the servo loop for operation. It is true unless there are no more UP or DN pulses on the SCT. This circuit has a delay of approximately 12 seconds to allow for low frequency operation.

Both signals are available at the output driver and are also indicated with a green (FBA) and a red (EOF) LED on the SCT.

Motor Driver Circuit (previously on MDR Board)

NOTE

The MDR board 79835-66513/33 is now obsolete. The functions of this board are now located on the MCD board 79835-66521. For upgrade use kit 79835-68722 which contains the MCD board 79835-66521 plus the SIC board 79835-66520.

The MDR acts as an interface between the controller and SCT and the hardware respectively. It is designed to drive two three-phase variable reluctance motors alternately, to serve four light switches and to interface a PTC resistor as a leak detector. The two motors drive the metering pump and the rotary valve unit of the solvent delivery system (SDS).

The MDR interfaces with the controller via the HP 1090 I/O Bus. All inputs to the controller run to the Z80A. From this information the Z80A derives commands for the slave processor, which uniquely transfers data from the controller board (CTL/MCO) to the MDR.

The MDR can be divided into five basic functional groups:

Interface

Dual Bridge Amplifier

Dynamic Light Switch Control

Status Logic

Leak Detection (see “Leak Detection Circuits” on page 171).

Figure 72 **Block Diagram - MDR Board**

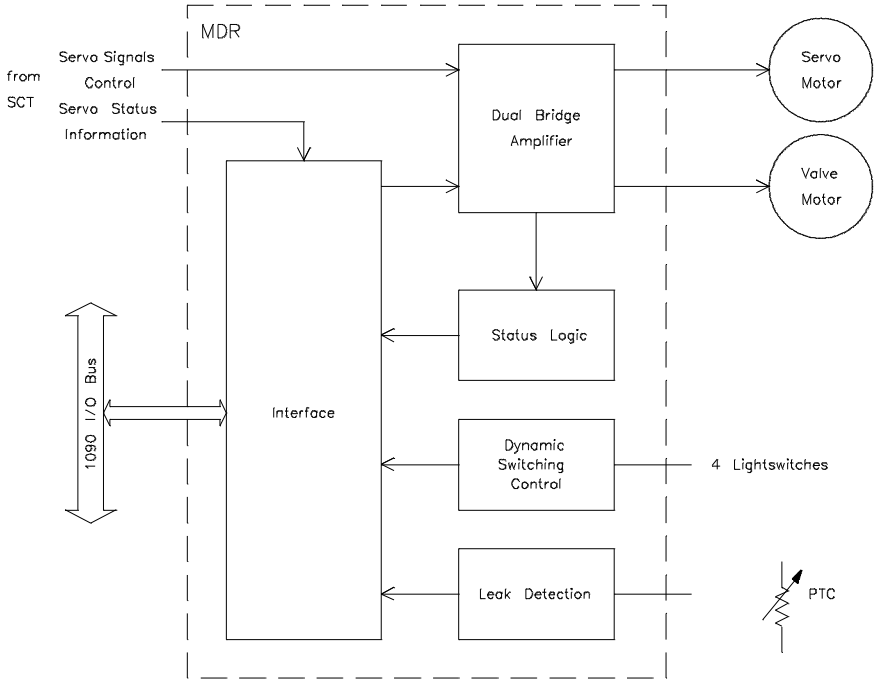

Interface

The interface circuit connects the electronics of the MDR and some status signals of the SCT to the controller (Z80A). Four data bits are provided by the slave processor for dual bridge amplifier control. Signals and their description can be obtained from the following sections. Abbreviations are used in the Figure 73 on page 157.

Figure 73 **Interface**

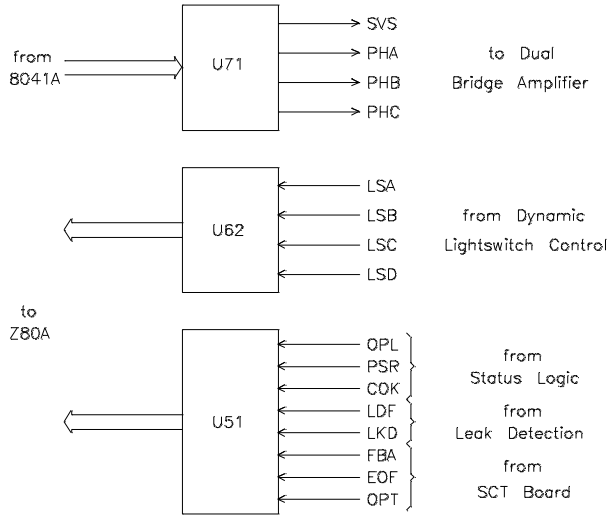

Dual Bridge Amplifier

A dual bridge amplifier is the power driver for two three-phase variable reluctance motors as they are used in this application. Since only one motor has to be driven at a time, it is useful to switch the power amplifier between the two motors.

Fast response and a linear characteristic are basic requirements for a good closed loop performance. In order to meet these requirements, three main features have to be implemented.

- A switched mode power amplifier has to be used for good efficiency.
- Constant switching frequency to assure low acoustical noise.
- No analog signal should be used in order to achieve improved electrical noise immunity.

Depending upon the state of the SELECT VALVE/SERVO signal (SVS), two sets of control signals are available. The valve motor control is with:

PHA Phase A
PHB Phase B
PHC Phase C
+5V Gain (always “High”)
VCL Valve Clock

The servo motor is controlled with:

SELA Select Phase A
SELB Select Phase B
SELC Select Phase C
GB Gain Bit
PW Pulse Width

The selected set is connected to the input of the current controller, which in turn controls six current-regulator switches (one for each motor winding) and three phase-select switches according to the amplifier control logic. The sum of all currents flowing through the phase select switches is converted into a voltage and fed to the current controller.

Figure 74 **Block Diagram - Dual Bridge Amplifier**

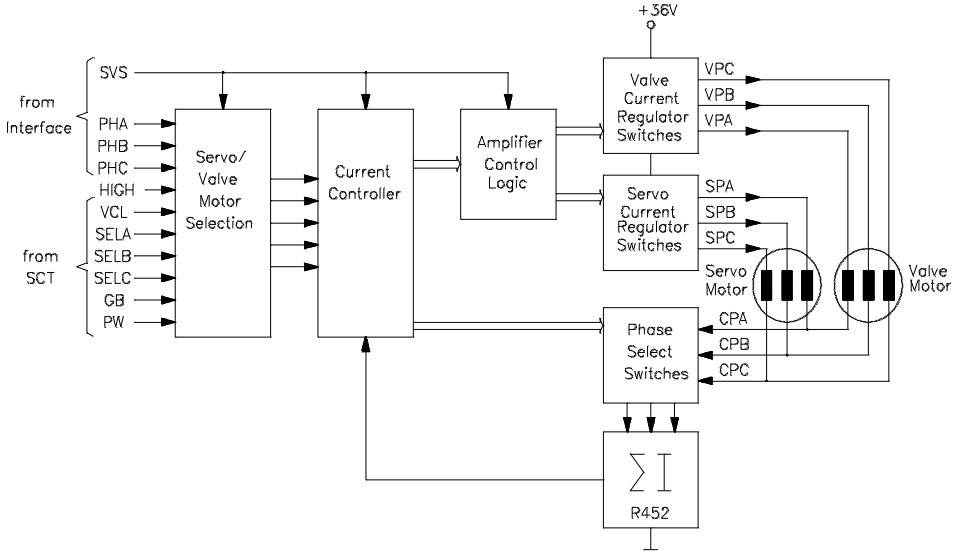

The use of a dual bridge amplifier allows a very accurate control of current through each motor winding and thus a very precise control of motor movement.

The output stage is a half active switched mode bridge amplifier. Three states are possible. When S1 and S2 are closed, current flow increases and tries to reach the maximum current value (I max) exponentially. With S1 opened, current decreases from the actually reached value to no current, also with an exponential characteristic.

During these two states the current can be measured as a voltage drop across the sense resistor. With both switches open, the current decrease is also with an exponential characteristic, however the final value is the negative amount of the maximum current. Therefore current through the winding comes to zero faster.

Dynamic Light Switch Control

The four light switches for each Metering Pump are feedback elements to assure correct operation. To protect the system against a failure (e.g. ambient light, component failure, disconnection) light switches operate with a dynamic light emission. Light sources are driven (LED Drivers) with a 2.5 KHz square wave signal with a duty cycle of 20% (Timing). In proper operation this signal is available at the light switch outputs. After passing through a correlation filter, which is synchronized with the timing circuit, a quasi-static signal is available for the controller.

Figure 75 **Block Diagram - Dynamic Light Switch Control**

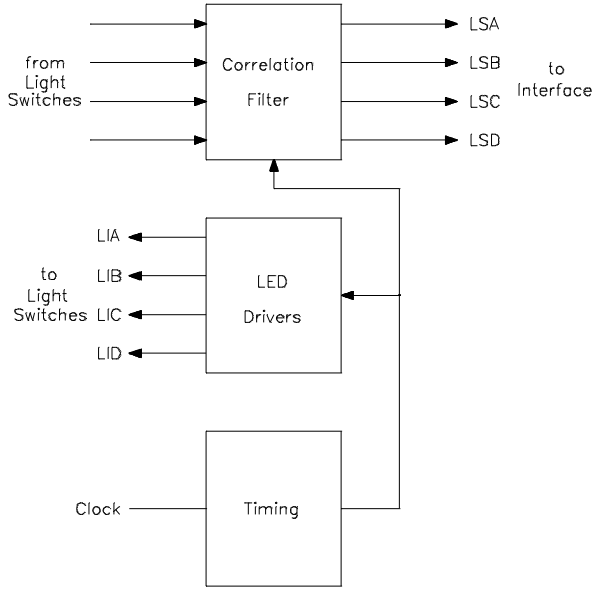

Status Logic

The status logic creates a three bit information for the controller about the status of the MDR. The clock check circuit is a dynamic detector that provides a status signal about the presence of the 2.5 KHz cycle (COK).

Undervoltage conditions of the supply voltages +36 V_R, +36 V and +12 V are sensed with the power supply check. In addition, -12 V and +12 V are checked for symmetry. The green LED on the MCD is ON when all voltages are present.

Status information of the sum of the current through all windings is provided with the power output check circuit (OPL). The current signal runs through a low pass filter in order to suppress spikes. The following comparator generates the digital status information. After valve switching, the low pass filter is cleared in order to avoid wrong signals caused by too fast response of this circuit.

Figure 76 **Block Diagram - Status Logic**

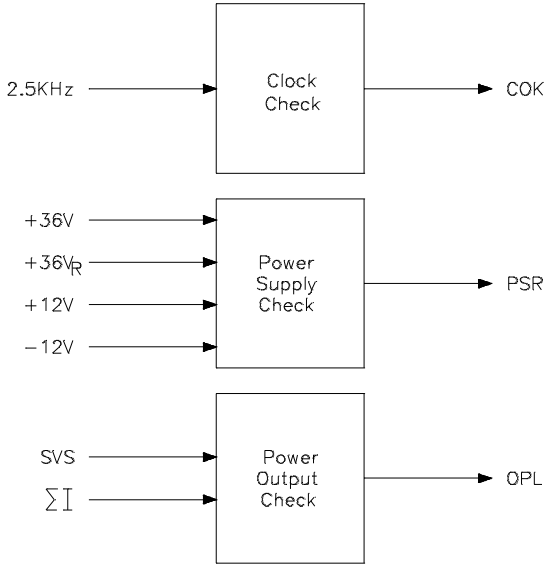

Figure 77 **Board Layout MDR Board**

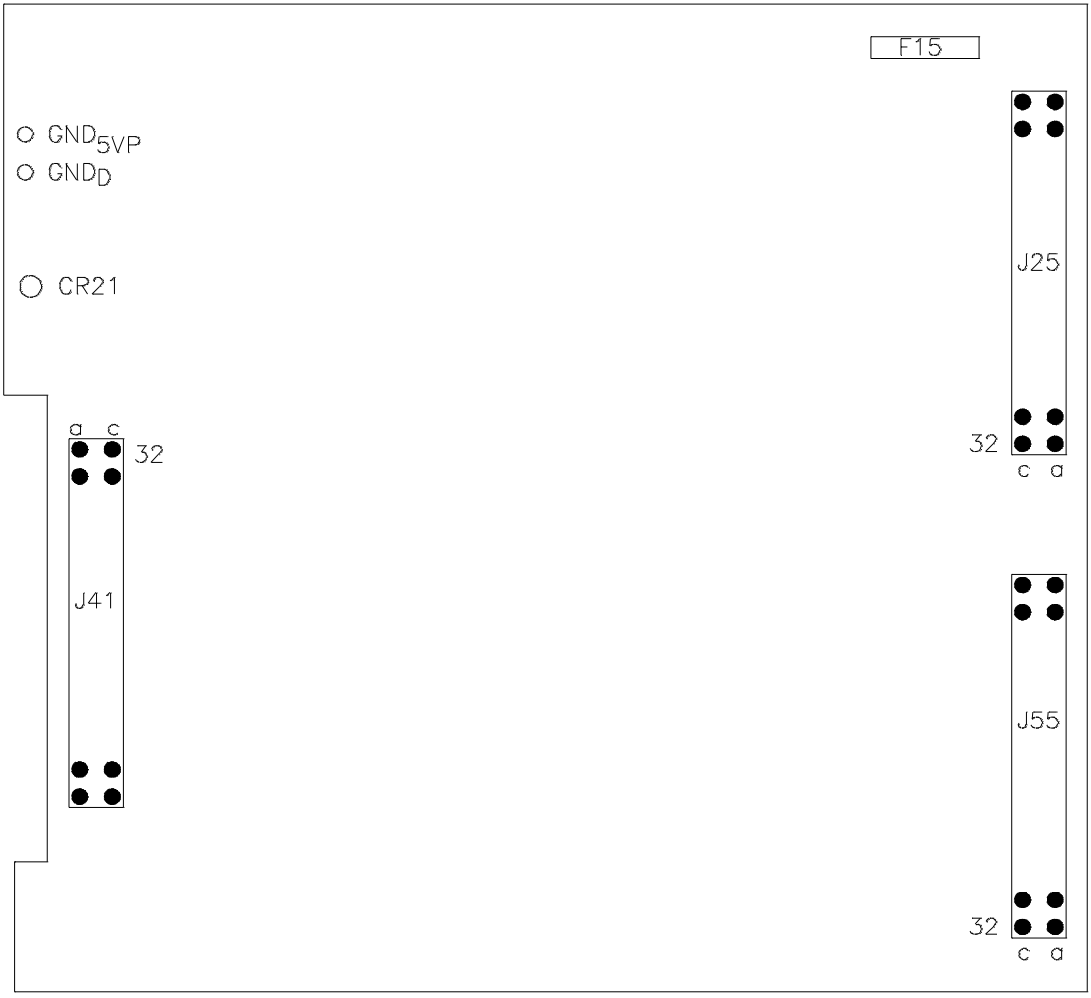

Low Pressure Transducer Board (LPT)

The low pressure transducer board (LPT) monitors an output voltage related to a pressure, measured in the low pressure compliance (LPC). Measurement is taken with a strain gauge bridge assembly mounted on a spring. Output voltage is negative going for increasing pressure. The LPT characteristic shows a -1 V output up to a pressure of approximately 2 bar. In the range from 2 to 6 bar there is a linear upslope with increasing pressure to -8V. Pressures between 4.6 bar and 6 bar result in a flow reduction. Pressures above 6 bar will cause the controller to switch off the SDS indicating a malfunction.

LP1 and LP2 (low-pressure values) do not have units. These values are not pressure (bar) readings!

Figure 78 **LPT Pressure Curve**

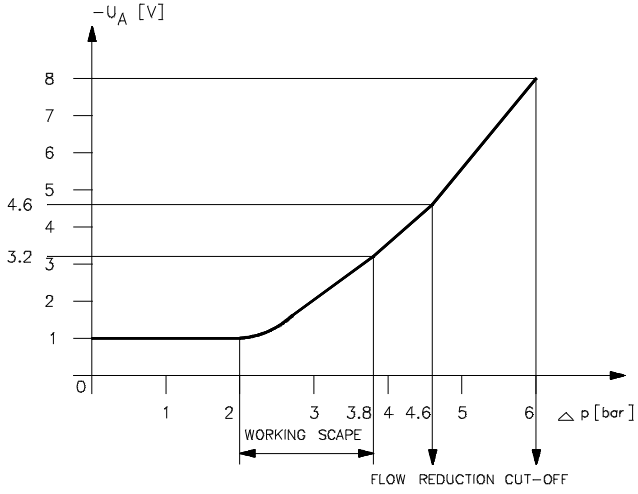

The LPT is installed and preadjusted into the LPC at the factory. Only the complete assembly can be replaced in the field. No adjustment, neither electrically nor mechanically, are possible after replacement, since supply voltages are regulated on the board and mechanics cannot be adjusted due to low tolerances.

CAUTION Do not attempt to adjust the zero or the gain potentiometers of the LPC. Incorrect adjustment will cause incorrect response of the SDS to pressure changes in the LPC which may in turn damage SDS components or the analytical column.

Figure 79 **Block Diagram - LPT**

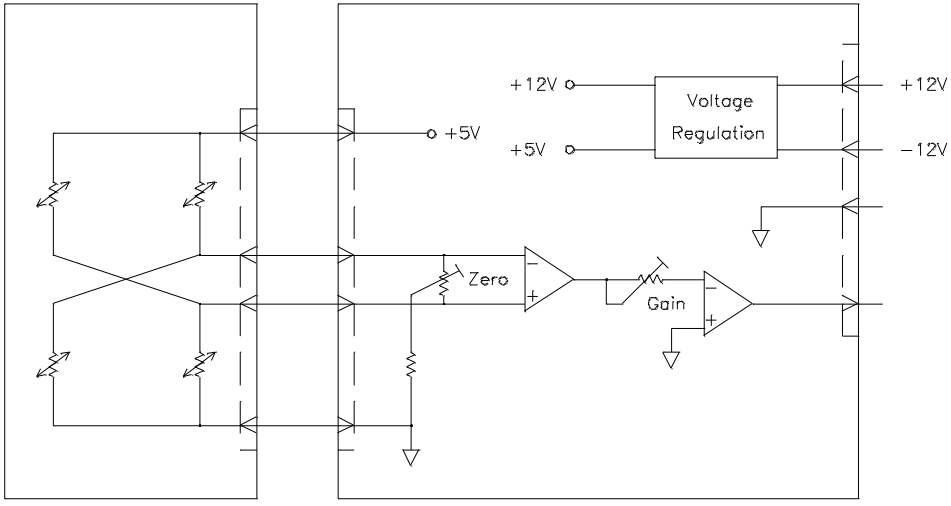

High Pressure Transducer Board (HPT)

The high pressure transducer board (HPT) is built into the high pressure damper and measures the system pressure on the high pressure side. A negative going voltage is provided showing a linear characteristic between 0 bar to 440 bar from -1V to -8V. This measurement is taken with a strain gauge bridge mounted on a metal tube.

NOTE

The HPT is installed and preadjusted in the factory. Only the complete assembly can be replaced in the field. No adjustments are possible.

Figure 80 **HPT Pressure Curve**

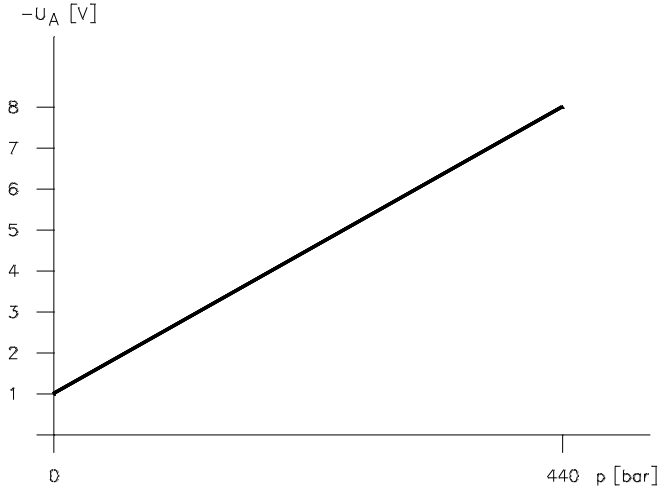

The block diagram is like the one from the LPT, see Figure 79 on page 163.

MPL Board and RVS Board

The Metering Pump Limit Board (MPL) and Rotary Valve Sensor Board (RVS) provide status information on proper execution of a movement. The MPL board senses the upper end position of both pistons of the metering pump system. The RVS board checks the position of the rotary valve unit. Both boards are interconnected to the MDR via the solvent delivery system motherboard (SDM). Read out and control of the light switches is accomplished on the MCD.

Detailed description can be obtained from “Metering Channel Driver Board (MCD)” on page 152.

Figure 81 **Block Diagram - MPL/RVS**

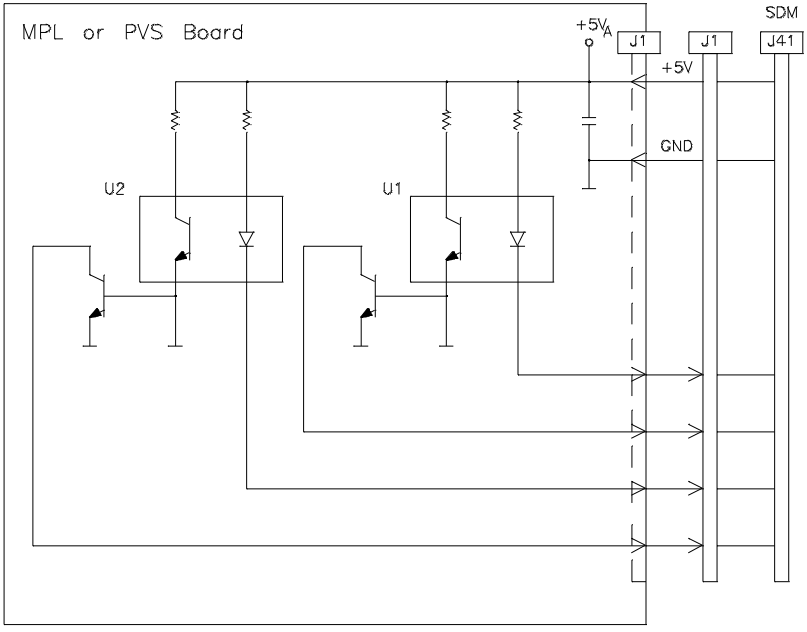

Figure 82 **Board Layout - MPL/RVS**

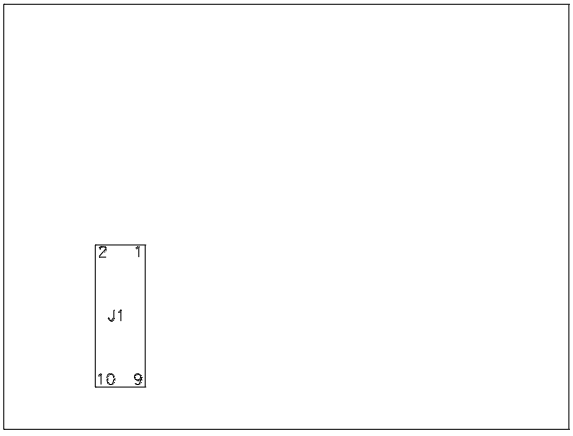

MPL

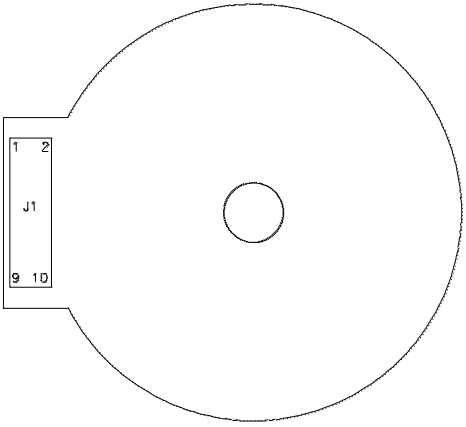

RVS

Pump Stroke Sensor Board (PSS)

The pump stroke sensor board (PSS) provides a pulse each revolution of the high pressure pump motor. A slit in the wheel, mounted on the pump gear, allows light to fall on the photo detector for approximately 10 ms. This signal is used to provide feedback for the controller (pump is running!) and, at the same time, it synchronizes the A/D conversion on the mainframe controller board and metering pump valve actuation.

Figure 83 **Block Diagram - PSS**

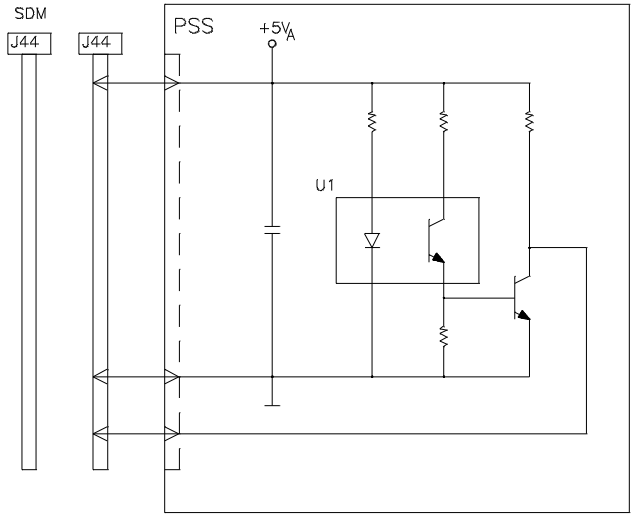

Solvent Delivery System Motherboard (SDM/SMO)

SDM 79835-66511: obsolete

The MDR and SCT boards plug into the following connections on the SDM:

Figure 84 **Board Layout - SDM**

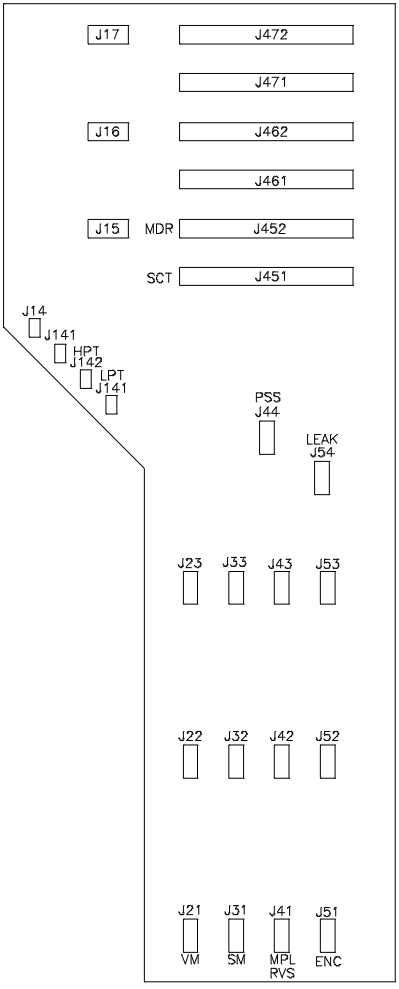

MDR Connections

Channel A:	J15, J452
Channel B:	J16, J462
Channel C:	J17, J472

SCT Connections

Channel A:	J451
Channel B:	J461
Channel C:	J471

SMO (79835-66522)

The MCD board (79835-66521) plugs into the following slots on the SMO:

Figure 85 **Board Layout - SMO**

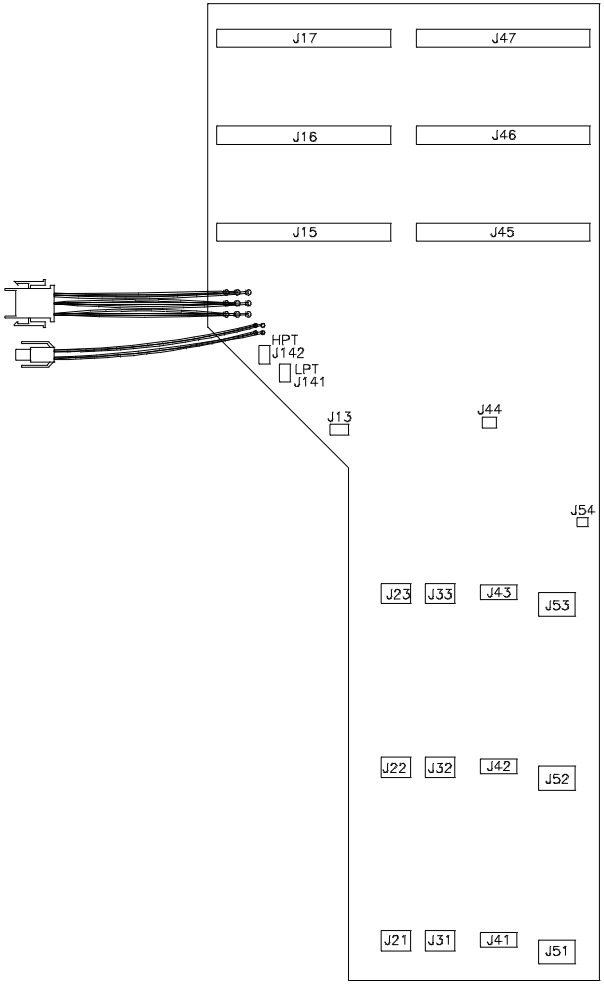

MCD Connections

Channel A:	J15, J452
Channel B:	J16, J462
Channel C:	J17, J472

Connections from the SDM/SMO

Connections are made from the SDM/SMO 79835-66511/-66522 to the following circuits:

Table 22 **Connections from the SDM/SMO**

Valve Motors	Channel A:	J21
	Channel B:	J22
	Channel C:	J23
Servo Motors	Channel A:	J31
	Channel B:	J32
	Channel C:	J33
MP Limit Board and RV Sensor Board	Channel A:	J41
	Channel B:	J42
	Channel C:	J43
MP Shaft Encoders	Channel A:	J51
	Channel B:	J52
	Channel C:	J53
Other Circuits		
Pump Stroke Sensor Board (PSS)	79835-66517	J44
Leak Sensor (see “Leak Detection Circuits” on page 171)	79846-61602	J54
	79835-61620	
Low Pressure Compliance (LPC)	79835-66513	J141
High Pressure Transducer (HPT)	79835-66519	J142
Controller Motherboard (CTM)	01090-66500	J143
Power Supply Motherboard (PSM)	01090-66524	J144

Leak Detection Circuits

The leak detection system uses a PTC (positive temperature coefficient) resistor as leak sensing item. Liquid cooling the PTC results in a decrease of the resistance.

NOTE All leak sensor circuits use the same PTC sensor, 5061-3356.

The PTC is built in a resistor divider which is fed with a constant voltage. From the voltage divider a signal can now be obtained depending on the current through the PTC and hence depending on the temperature.

In order to get a status signal for any error condition a leak detection circuit is required. It provides a low going signal for two error conditions.

In leak condition the resistance of the PTC decreases, the total resistance of R4 and the PTC decreases and also the ratio of both. Hence a cooled PTC results in an increasing voltage at TP1. As soon as the voltage exceeds the one applied with resistor divider R1, R2, R3 to the positive input of comparator U1, its output goes low. In case the PTC is disconnected or any connection to it is broken, comparator U2 provides a low going output signal since the voltage at TP1 is falling below the voltage applied to the negative input of U2.

For the injector and detector these two different signals are combined and give the same status signal (LEAK) to the controller. Only for the solvent delivery system leak detection two messages are available, LEAK in case a leak is sensed, or LEAK DETECTOR FAILED when the sensor is defective or disconnected.

Table 23 **Working Conditions of the PTC**

Condition	Temperature	Resistance
Normal	75°C	400 to 500 Ω
Error	< 55°C	approx 150 Ω

Figure 86 **Block - Diagram Leak Detection Circuit**

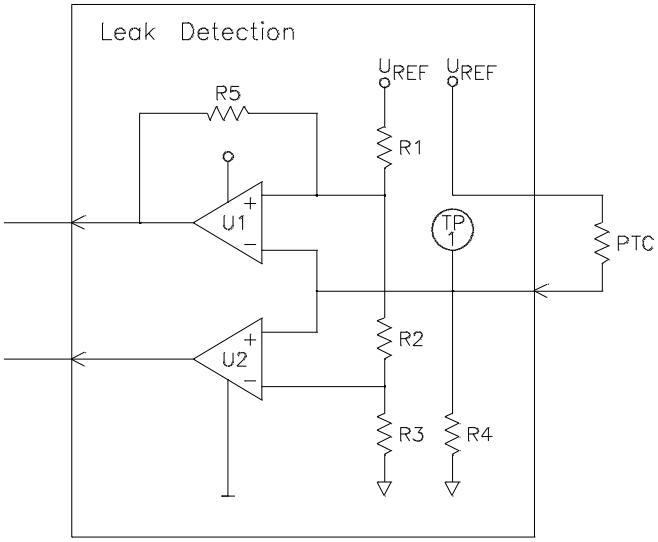

NOTE There are two known causes for ghost leak messages:

Sensor is touching metal.
Firmware problem (only Revision A of MEM board, see also “Firmware on MEM 01090-66503 (obsolete)” on page 49).

SDS Leak Sensor

The leak sensor assembly is connected to J54 (J31 Rev.A) of the solvent delivery system motherboard (SDM). Connections lead to J452 (J52 Rev.A) of the SDM where the motor driver board (MDR) for channel A is plugged in. From connector J67 of the MDR the leak sensor signal is connected to the leak detection circuit. The status signals are sent to the controller via the data bus interface.

Figure 87 **SDS Leak Detection Circuit**

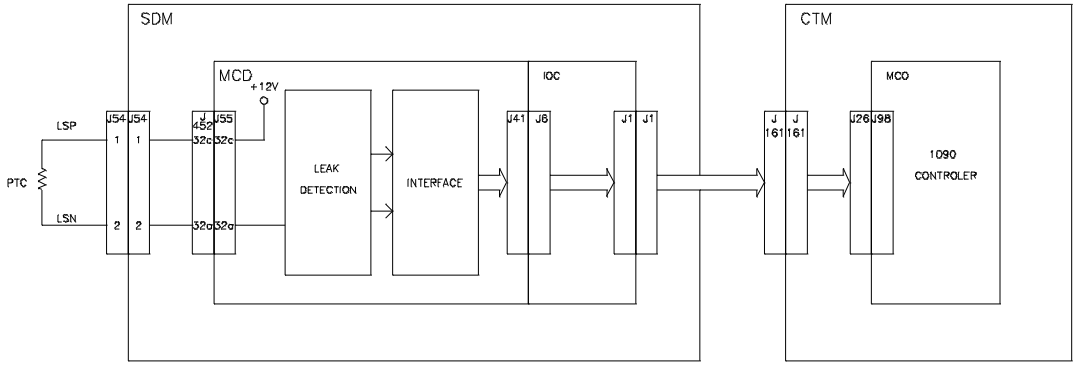

Injector Leak Sensor

The injection system leak sensor is connected to J22 of the injector controller board (ICO). Electrical connection is made to J451 of the controller motherboard (CTM) via the cable connector J32. On the CTM it is led to J36 where the injector sampler driver board (ISD) plugs in. One connection leads to +18V on the CTM, the second one leads to pin 18a from where the signal goes to the leak detection circuit. The leak status signal is transferred to the controller with the data word through the I/O control circuit.

Figure 88 **SDS Leak Detection Circuit**

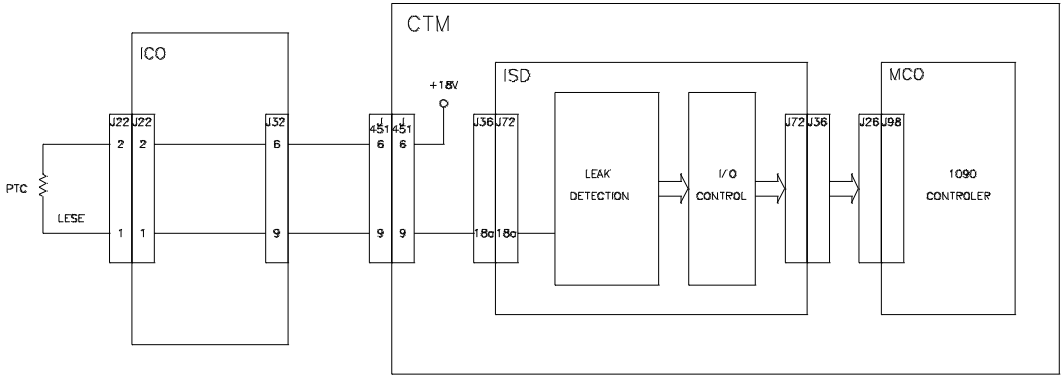

Filter Photometric Detector (FPD)

There is a leak sensor located in the cell compartment underneath the flow cell. Electrical processing is done with detector electronics. Only the message itself is transferred to the HP 1090 controller. A detailed signal description is therefore provided in the “Filter Photometric Detector (FPD)” on page 293.

Diode Array Detector (DAD)

The above said is also true for the diode array detector. The message is connected directly to the system keyboard in this configuration. The HP 1090 controller is not involved.

8

DR5 Procedures

Booster Pump

Booster Pump Replacement

No compression during/after installation

No compression during/after installation of the pump is a sign of air in the oil cycle.

- ❏ Purge the pump by opening the reservoir tubing and running the pump.
- ❏ Then open the override valve outlet and purge again.

Flow reduction

- ❏ Remove the oil from the reservoir.
- ❏ Replace the oil inlet valve.
- ❏ Clean the magnet/reservoirs to prevent particles to go into the oil cycle.

Membrane Replacement

CAUTION

When the membrane is replaced, it is important that only the new type of pump head is used (raised corners, polished surface), and that the pump body is not damaged.

1. Remove the oil from the oil reservoir.
2. Remove the booster pump from the 1090.
3. Plug the hole in the cover of the gearbox on the top of the booster pump to prevent oil leaking out of the gearbox.
4. Remove the pump head and membrane.
5. Inspect the pump head. If the head is scratched or damaged, or if the head is of the old type, exchange the head for the new type.

CAUTION

The new type of pump head has raised corners and a polished surface with concentric grooves. Only this type of head will ensure a good seal with the membrane.

6. Inspect the pump body. If the pump body appears scratched or damaged, exchange the complete booster pump.

CAUTION If you do not change the booster pump, a damaged pump body will greatly reduce the lifetime of the membrane, and quickly lead to oil leaks!

7 Clean the surfaces of the pump body and pump head with IPA (Isopropyl alcohol) to remove all traces of oil.

8 Use a toothpick to apply a small amount of the grease to the four threaded holes in the pump body, and to the head of all four pump head screws (see Figure 89).

CAUTION You must use the grease (PN 79846-65501). Any other type of lubricant has different lubricating properties which may cause incorrect force to be applied to the membrane.

Figure 89 **Applying the lubricant to the pump body / screw**

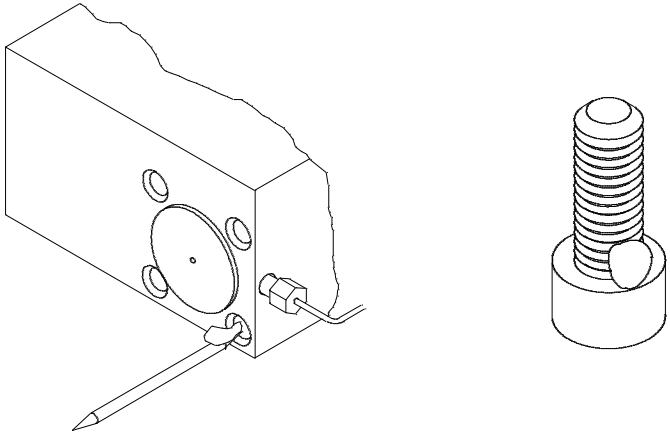

9 Install the new membrane (gold on BOTH surfaces!) so that the raised edge of the membrane (resulting from the manufacturing process) is positioned towards the pump body. You can feel the raised edge with your fingers.

Figure 90 **Installing the membrane**

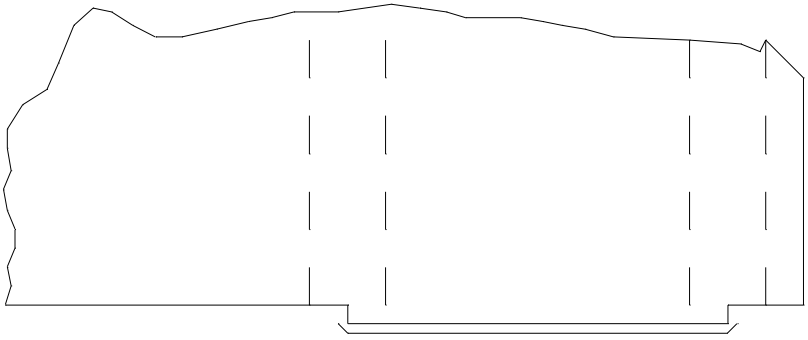

10 Insert the screws into the pump head, and tighten the screws until they are finger tight.

11 Tighten the pump head screws x-wise in at least 3 steps to 9 Nm only.

12 Remove the plug from the hole in the gearbox cover, and reinstall the booster pump in the 1090.

13 Refill the oil reservoir, and purge air from the oil side.

NOTE Do not overfill the oil reservoir. The oil level should be 18 mm below the rim of the reservoir.

14 Flush the system with Hexane, and then Isopropyl alcohol (IPA) to remove oil from the solvent path.

CAUTION Ensure the column and detector flow cell are disconnected before flushing.

Override Valve Adjustment

Pressure Measurement

To determine the operating pressure of the override valve, proceed as follows:

1 Obtain the pressure gauge (79896-68101).

2 Connect the pressure gauge to the outlet solvent ball valve of the booster pump.

3 Set a flow of 2 ml, any solvent. Access LP readings.

4 Start the pump. The pressure gauge reading will begin to climb. Eventually, the pressure gauge reading will stop climbing. At this point, the LP numbers will quickly move upwards and set the Error EF16.

5 The point at which the pressure gauge reading stops is the operating pressure of the override valve. The specification is 440 bar (-30, +10 bar).

Valve Adjustment

If the value of the override valve is not in specification, proceed as follows:

1 Loosen the locking nut.

2 Reduce/increase the operating pressure of the override valve by turning the adjustment screw counter clockwise/clockwise. An 1/8th turn changes the operating pressure by about 90 bar.

3 Tighten the locking nut and repeat the operating pressure check.

9

DR5 Diagnostics and Troubleshooting

SDS Diagnostic Cable

The analog signal from the low pressure and high pressure transducers can be used as a diagnostic tool for assessing the performance of the SDS. The LP and HP measurements from the Input /Output Connector Board (IOC 79835-66512) or the Bus Connector Ternary board (BCT 79835-66523) can be delivered to a HP 339X. The resulting plot can be used to analyze the performance of the solvent delivery system.

Instruments with the BCT board (all Series 2 and later Series 1 instruments) provide a dedicated output to allow a standard signal cable 01040-60100 to be used for this purpose.

Instruments with the IOC (early Series 1 instruments require a modified cable in order to plot the signal on an integrator. Construction of the cable is described below.

Focus of the Test

The output of the low pressure transducer (LPT) can be used to compare the performance of channels in an SDS module, or to compare the efficiency of the pistons in a single pump.

The test is a logical extension of the acetone tracer precision test and gives the ability to see which of the channels is a “faulty” one. For this reason testing an isocratic or PV5 system is difficult. No general comment about the performance of the metering pump is possible.

You can only compare the delivery behavior of the two pistons.

Preparing the Diagnostic Cable

This modification is only required for Series 1 instruments with the IOC board installed.

The cable requires a 15:1 divider and inverted polarity. To build yourself a cable, obtain the following parts:

Table 24 **Test Cable Parts**

Description	Part Number
Signal Cable (to 339XA)	01040-60100
Signal Cable (to 3388A)	01040-60106
Signal Cable (to non-HP)	01040-60105
Resistor 1.5 KOhm	buy locally
Resistor 20.5 KOhm	buy locally
Red Clip	buy locally
Black Clip	buy locally

Assembling the Cable

NOTE In the following procedure, the wire color code in brackets applies to signal cables 01040-60105 and 01040-60106.

1. Remove the grey hood from both sides of the signal cable.
2. To one side, we add the divider between 1 V and analog ground. Build the divider as shown below.
3. Remove the connector on the other end of the cable. Fix the red clip to the gray (black) wire. Fix the blue clip to the wht/yel/gra (clear) wire. This achieves the required polarity inversion. The remaining wires can be cut or taped down as you wish.

Figure 91 **Diagnostic Cable**

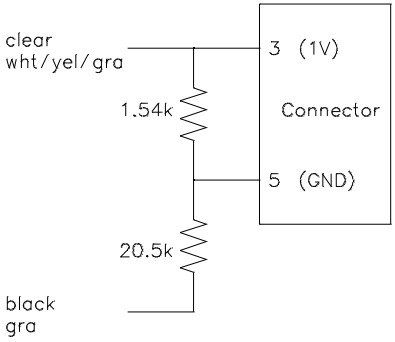

LP Plot Test Procedure

Preparing the Instrument

1 Prime all channels thoroughly with degassed methanol or isopropanol.

NOTE Use the same solvent for all channels!

2 Connect the test cable:

For BCT Boards

❏ Connect the signal cable to the BCT board so that the *down sign* on the cable connector points towards the label LPT on the BCT board.

For IOC Boards

❏ Connect the *red test clip* to the test point labelled LPT .

❏ Connect the *black test clip* to the test point labelled GND .

3 Set the following SDS parameters:

Flow > 1.5 ml (e.g. 2 ml/min)

%A =100

4 At the integrator, set the following parameters:

Zero = 10

Att = 5

CHTSPD = 10

Running the Test

1 Turn on pump A (%A=100), and wait a few seconds until the metering pump reaches the set flow rate.

2 Press Plot-key on the integrator.

The analog signal from the LPC is now plotted on the integrator. Figure 92 shows the characteristics of the plot.

In a normal functioning pump, both pistons deliver the same amount of solvent (and therefore pressure) to the LPC. The sharp negativ e peaks in the plot are due to the switching of the rotary valve.

Figure 92 **Diagnostic Plot**

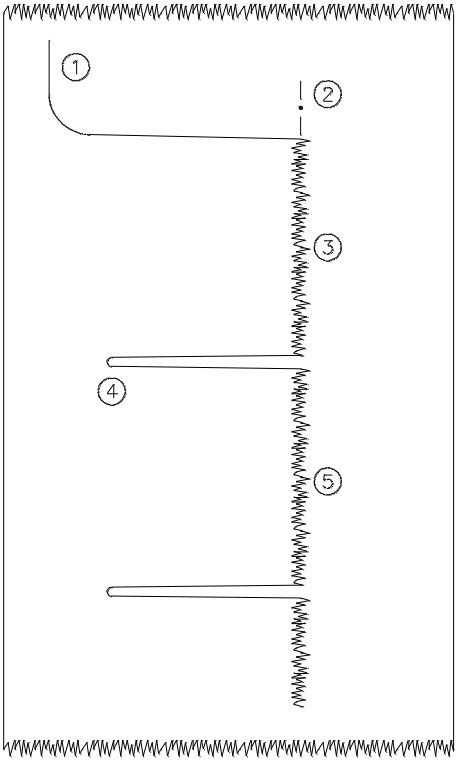

1. Pump off
2. One side of metering pump delivering. Offset represents mean pressure in LPC.
3. "Noise" is the LPC output profile which is quite normal.
4. Switching of rotary valve LPC pressure momentarily drops.
5. The other piston of the metering pump takes over. Plot returns to the same upscale position.

3 Now set pump B to deliver 100% solvent (%B=100), and compare the plot with that from channel A.

If both pumps show the same upscale position, we can assume that both pumps (metering pump piston and rotary valve) are pumping equally . If there is a difference between the two pumps, the total volume output of the defective channel would be incorrect, causing imprecision in the total flow mixture.

4 Repeat the plot for channel C.

NOTE This comparison between pumps is only possible if the same solvent is used in each channel.

Examples

Plot 1 in Figure 93 shows a typical plot of a binary HP 1090 without any problem. The instrument passed all tests.

Plot 2 in Figure 93 indicates that one side of channel B is delivering less than the other. In fact, the tracer test showed a mixing precision of ±0.3% (specs ±0.15%). The poor mixing precision can probably explained by the poor performance of the B pump.

Figure 93 **Example of Diagnostic Plot**

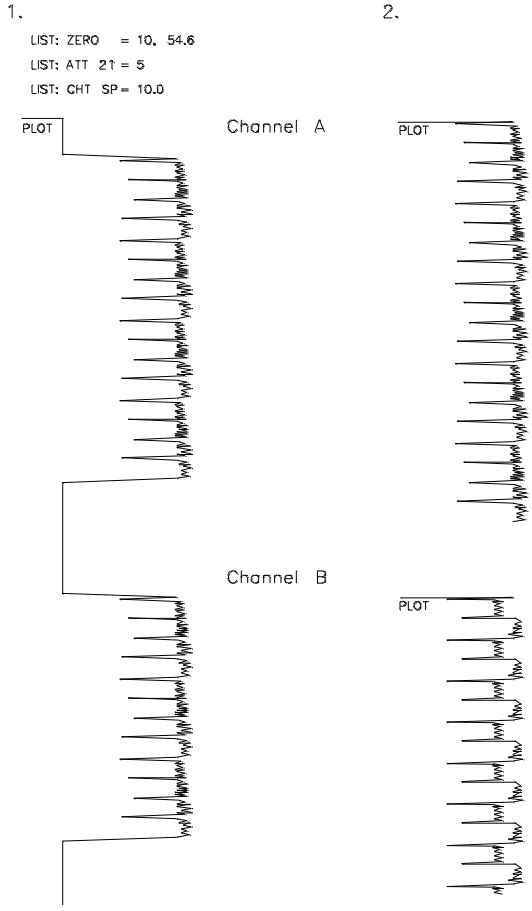

Failure Reasons

If one of the channels in a binary or ternary SDS system shows a malfunction it should be no problem to identify it. The question what part of the metering channel failed cannot be answered.

Possible repair actions to improve the performance of the channel:

- Rotary valve replacement. The KALREZ ™ gasket had flowed into one of the valve parts.
- Replacing the metering pump piston seal. Observing which piston is moving upwards while the plot is down scale shows you the bad seal.
- Tightening the fittings on the connector tubings from the rotary valve to the metering pumps (even if there is no liquid leak visible).
- Changing the solvent inlet filter. A higher resistance in the sucking tube will decrease the volume of the channel and will give lower readings than other channels.

10

PV5 Solvent Delivery System

Overview

Pumping System

The design of PV5 is based on the isocratic DR5 system and includes a 4-channel multi-channel gradient valve (MCGV) on the solvent inlet line to the single metering pump.

PV5 can be run with up to 4 solvents: 3 internal channels, and 1 external channel. Any binary or ternary gradients can be run from any combination of channels (channels A, B, C1 or C2). With the Quaternary PV5 option (1090 Series II only), any binary or ternary gradients, and a true quaternary gradient can be run (channels A, B, C, D).

In Series II instruments, all internal solvent and helium fittings which connect to the external channel connector (left side of 1090 Series II) are installed as standard in both ternary and quaternary versions. In addition, the Series II Quaternary option also includes an external solvent tray, solvent and helium fittings and capillaries.

NOTE

In Series I instruments, channel C2 can be used for flushing purposes. The fittings and capillaries inside the 1090 Series I to the MCGV and helium valve are not supplied as standard. The facility merely exists, and would be useful when running applications using buffered solvents. Channel C2 can be programmed and included in time tables.

Figure 94 **PV5 Pumping System**

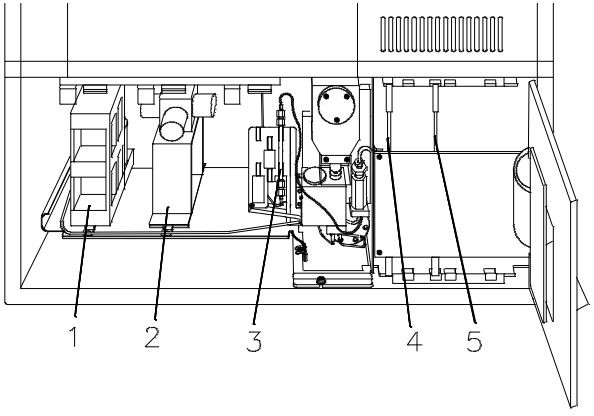

1. Metering Pump
2. Proportioning Valve
3. Static Mixer
4. MCD Board
5. CVD Board

Multi-channel Gradient Valve (MCGV)

Figure 95 shows the 4 inlet connections to the MCGV: A, B, C1 and C2 (A, B, C, D in Quaternary PV5).

Figure 95 **Inlets to MCGV**

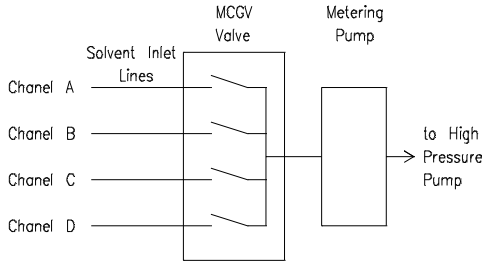

Think of the MCGV as a multi-position switch. As shown, all the switches are off or closed and no solvent from the A or B channels reaches the pump.

For Time 1 (see Figure 96), the valve opens the A channel, and solvent from channel A can pass through to the metering pump. The B path is closed.

Figure 96 **Channel A open**

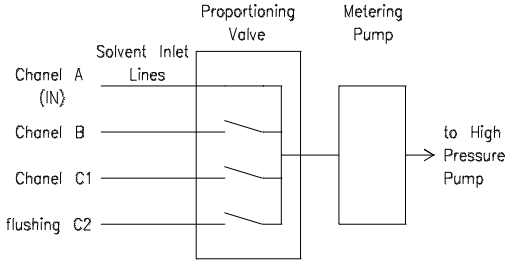

For Time 2 (see Figure 97), the valve opens the B channel, and solvent from channel B can pass. Notice now that path A is blocked.

Figure 97 **Channel B open**

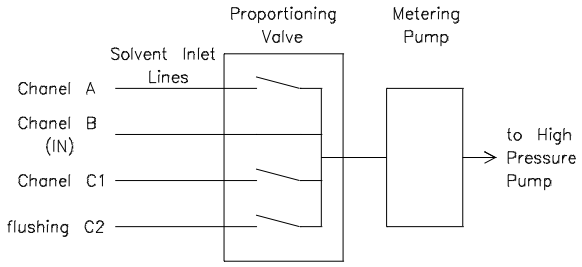

PV5 operates with a 89 µl fixed stroke volume of the metering pump, i.e. we split our flow up into 89 µl packets. These packets contain the solvent composition programmed with %B and %C.

For example, we want our packet to contain 80% A and 20% B.

Figure 98 represents one filling cycle. Remember, this is a perpetual process: there was one cycle before, and there will be one cycle afterwards.

Figure 98 **Filling Cycle**

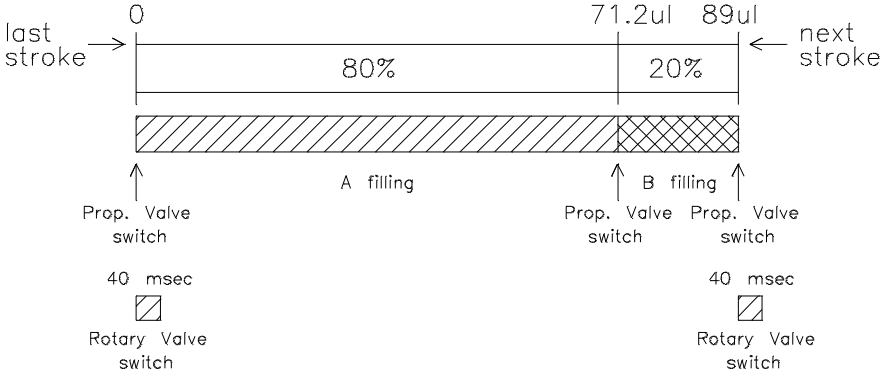

Every time the filling cycle is completed and the piston is at the end of the stroke, there is a firing of the rotary valve. This firing lasts ~40 ms (there is no flow during this time) and to avoid composition errors, the filling order is such that the largest plug of solvent fills at the same time as the rotary valve switches. Remember, shortly after a rotary valve switch the piston is

accelerated to make up for the 'no flow' state when the rotary valve is switching.

Figure 99 represents the flow from the MCGV to the metering pump during several filling cycles.

Figure 99 **Filling Cycles**

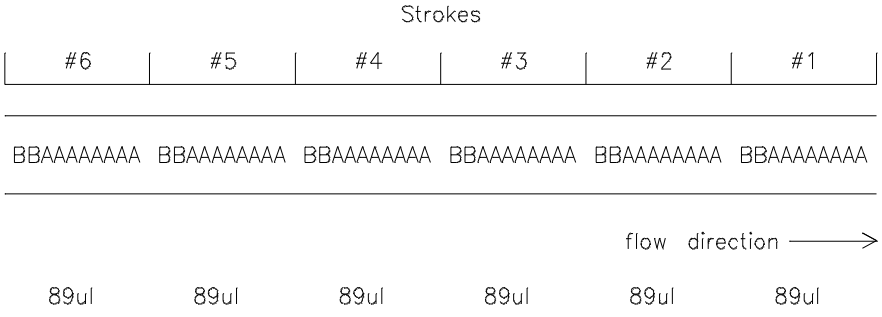

Mixing and Delay Volume

Figure 100 shows a diagram of the PV5 SDS.

Figure 100 **PV5 Diagram**

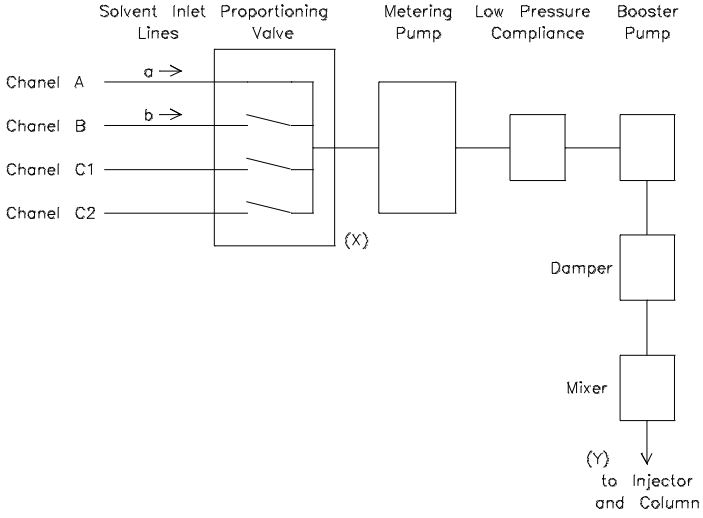

The delay volume of the SDS is measured from the point of mixing. In the DR5 SDS, the point of mixing is in the LPC. In PV5, the different solvents first meet and begin mixing inside the body of the MCGV. Therefore, the internal volume of the MCGV, capillaries, metering pump all contribute to the delay volume.

The way we form our solvent composition in the PV5 SDS, with distinct packets of solvent, makes it necessary to include a static mixer in the flow system to ensure adequate mixing. This mixer contributes ~700 µl to a total delay volume in PV5 of maximum 2000 µl depending on the pressure (DR5 delay volume < 500 µl).

PV5 Electronics

PV5 works with ChemStation or LUSI as a controller. The common control firmware is located on the MCO Board. The firmware supports all possible mainframe configurations.

NOTE

The Series II Quaternary PV5 option requires Pascal ChemStation software Rev. 4.2/5.2 and later.

The HP 1090L Series II with INET is ***not compatible*** with the Quaternary PV5 option.

Figure 101 **Control Electronics Block Diagram**

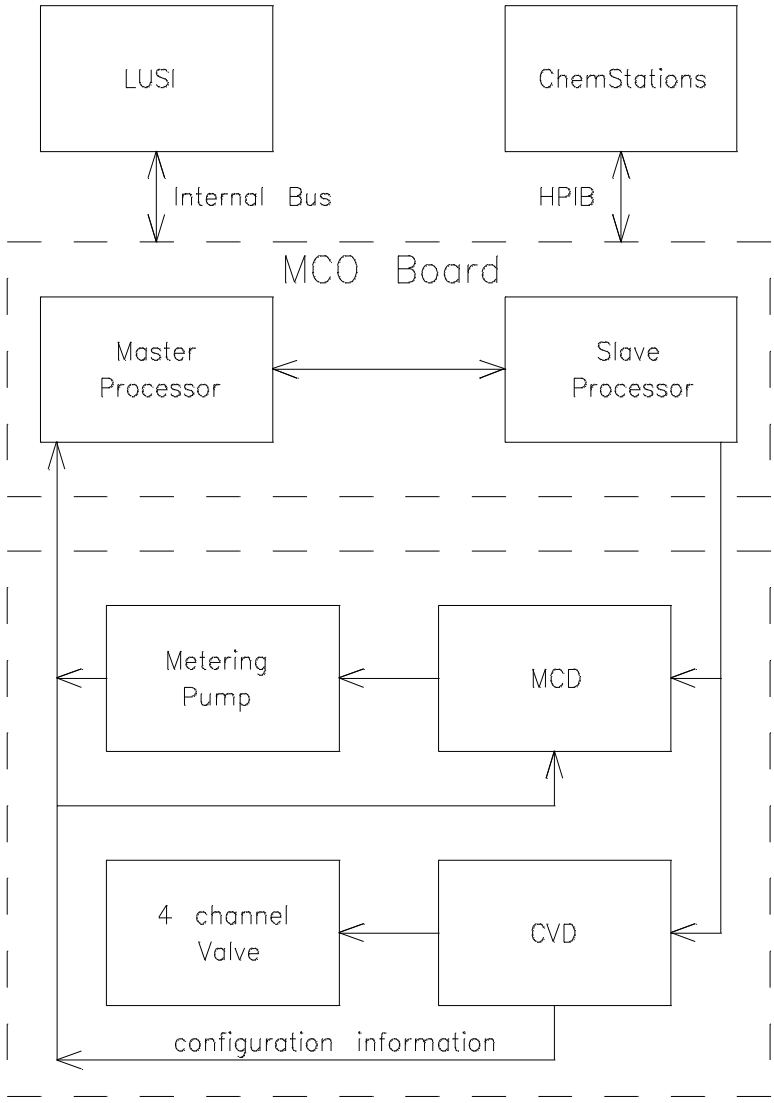

CVD Board

The CVD board is the interface between the instrument controller (MCO) and the MCGV. The board is located in the channel B slot of the SDS card cage. In the old style card cage the CVD must occupy the MDR slot in channel B.

The connection to the valve is made via the SDM/SMO motherboard and the control signals are supplied by the IOC/BCT board.

Configuration Switch S72

S72 is a 10 position switch. For ternary operation the switch must be set to position 1. For quaternary operation (Series II only), the switch must be set to position 7.

Control Latch

The contents of this latch defines the coil status. The latch gets its information from the slave processor, which is located on the MCO board. The output of which corresponds to

1	drivers on
0	drivers off

High Current Switch

One of the series resistors is shorted by transistors for 12 ms, in order to raise the current through the coils faster.

Hold Current Switch

After the high current is switched off, the current through the resistors is maintained for the set of time by these transistors.

Coil Status

The state of the coils is indicated by 8 LEDs, visible when the pump inspection door is opened.

"dark"	coil is switched off
"lit"	coil is switched on

Table 25 shows the meaning of the LEDs on the CVD (front view into the instrument):

Table 25 **LEDs on CVD**

LED 8 (uppermost)	coil 4	high current
LED 7	coil 4	hold current
LED 6	coil 3	high current
LED 5	coil 3	hold current
LED 4	coil 2	high current
LED 3	coil 2	hold current
LED 2	coil 1	high current
LED 1 (lowest)	coil 1	hold current

Coil Sense Circuit

The 36 V supply and the connection of the selection valve is monitored. The generated signals are evaluated while the pump is switched on.

If the 36 V fails, this circuit generates *EF 26 Selection Valve*.

If the supply voltage is available, but a connection problem exists (plug not inserted, cable broken) then this circuit generates error message *EF 25 Selection Valve*.

NOTE If *EF 26 Selection Valve* occurs, first check the fuse F11 on the CVD board.

Status Latch

The status latch returns the coil sense and configuration information to the processor on the MCO board. This latch is read by the processor if required.

Switching Mechanism of the Coil

The 12 V coils are supplied over 2 series resistors by the 36 V. To assure fast opening, one series resistor is shunted for 12 ms. For mixing operation with PV5 the involved coils are switched sequentially, the cycle (e.g. A, B, C1) is coordinated with the metering stroke, which operates at fixed volume per stroke.

Figure 102 shows an example (idealized curves).

Figure 102 **Valve Switching Mechanism**

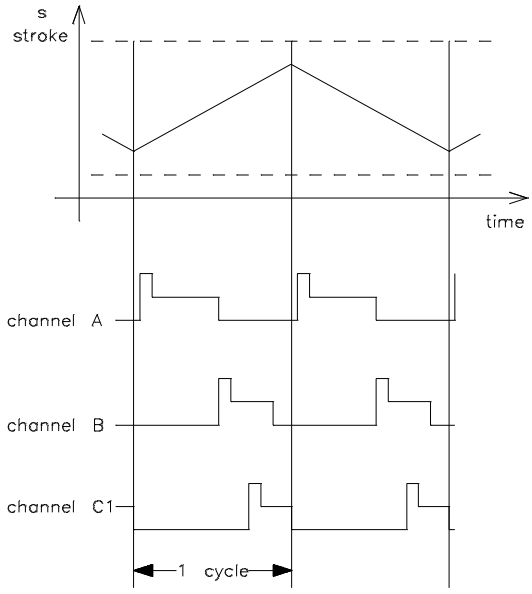

Figure 103 **Block Diagram CVD**

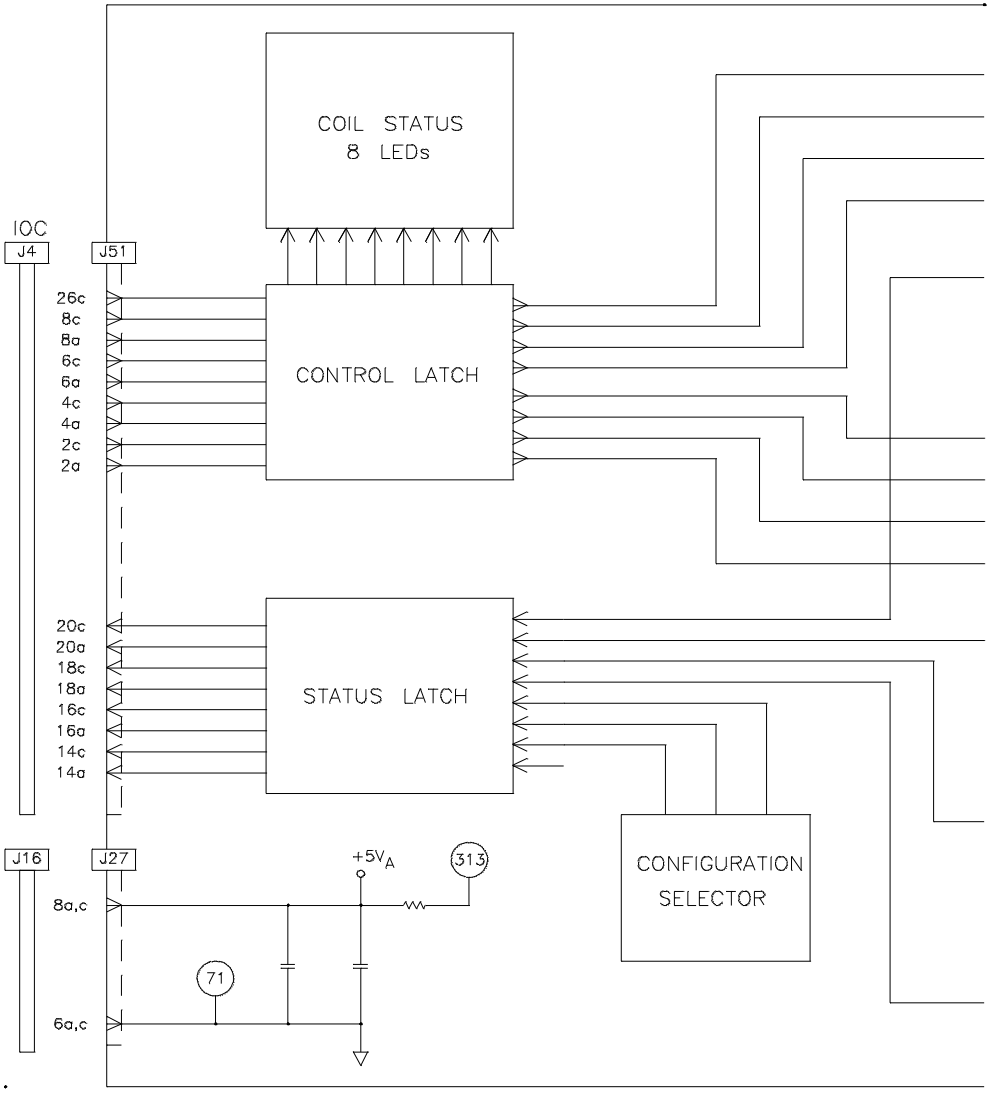

Figure 104 **Block Diagram CVD**

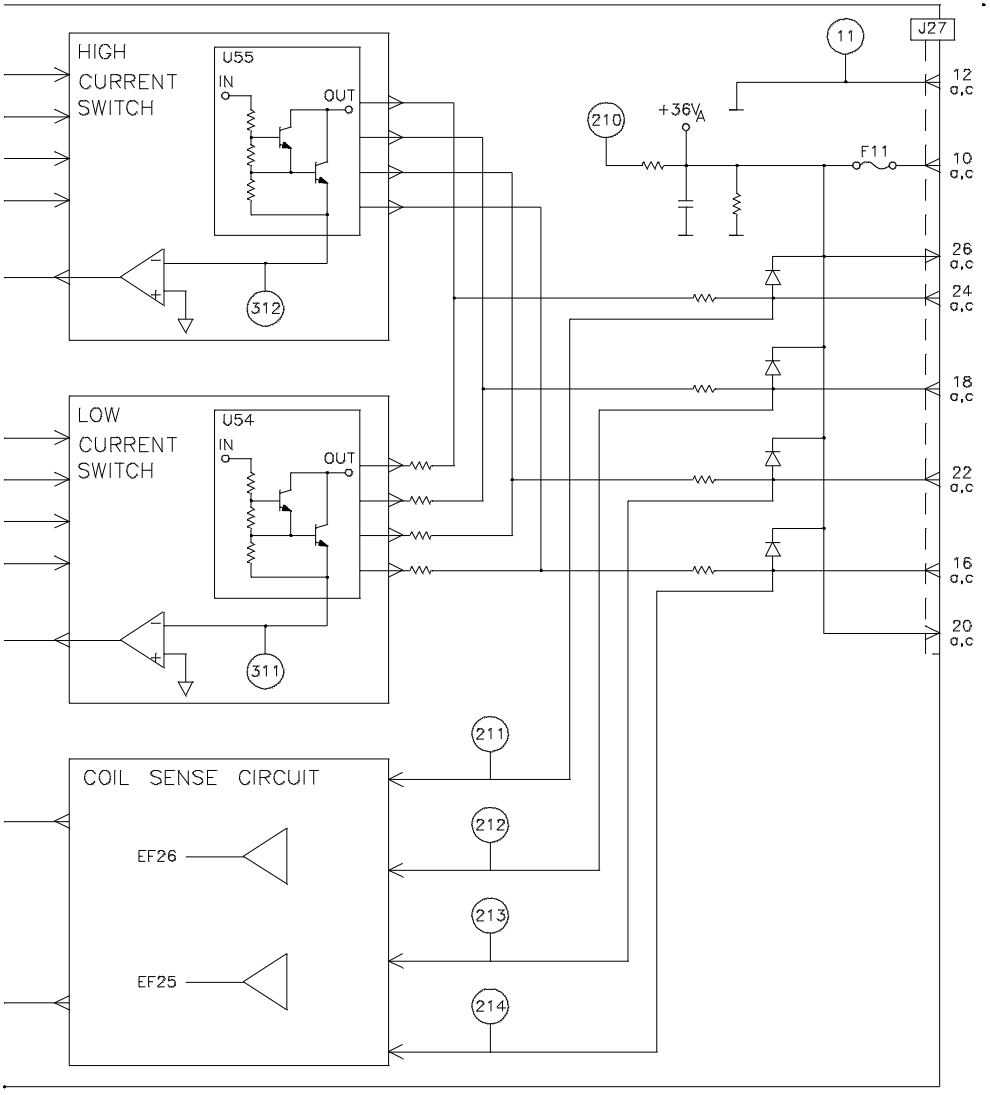

Figure 105 **Block Diagram CVD**

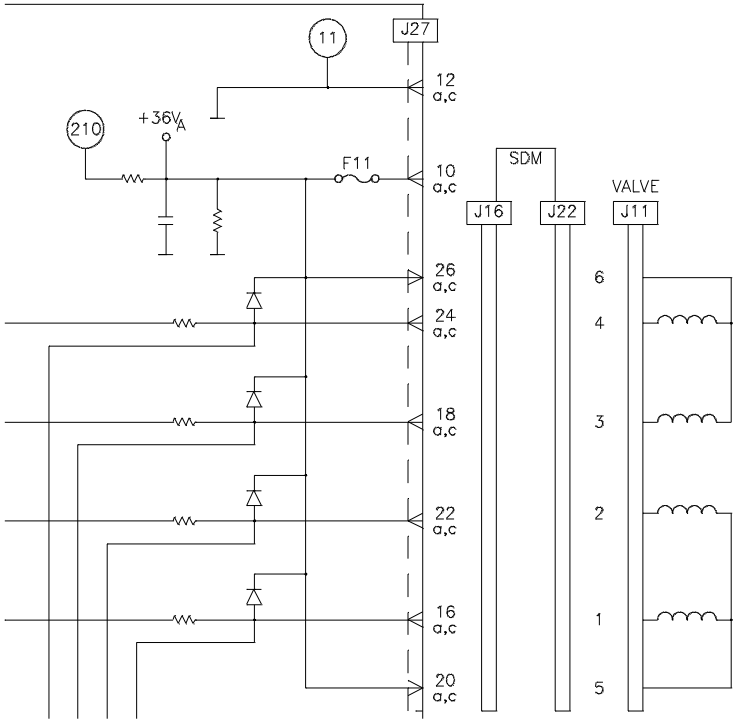

Figure 106 **CVD Board Layout**

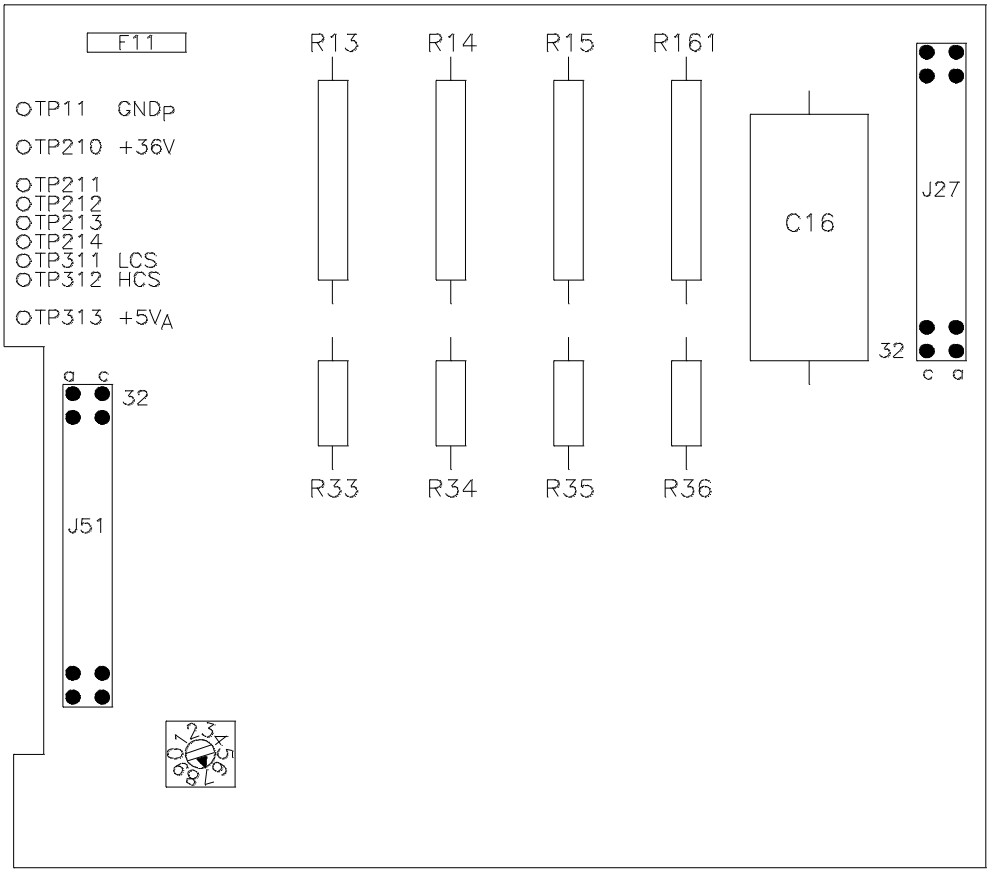

Compatibility

Replacing the CVD Board

The current CVD board is 79835-66534. This board is fully backwards compatible with all channel A electronics and valves.

Table 26 **CVD Compatibility**

	MDR + SCT in channel A	MCD in channel A	Proportioning Valve	MCGV
CVD 79835-66534	OK	OK	OK	OK

Replacing the Channel A Electronics

The current board is the MCD (79835-66521). This board replaces the obsolete SCT and MDR boards. When replacing either the SCT of MDR boards, use the MCD kit (MCD + SIC board: 79835-68722). However, if CVD Rev. A is installed, the CVD board must be modified (see “Modifying the CVD Board (79835-66530)” on page 205) for operation with the MCD board.

Table 27 **MCD Compatibility**

	CVD 79835-66530 Rev. A	CVD 79835-66530 Rev.B	CVD 79835-66534
MCD 79835-66534	CVD modification required	OK	OK

Replacing the Valve

The current valve is the MCGV (79835-67701). This improved valve replaces the obsolete proportioning valve (79835-61931). A defective proportioning valve must be replaced with an MCGV. However, the new MCGV is not directly compatible with the original CVD boards (79835-66530 rev A and B). If replacing a proportioning valve with an MCGV, the old CVD board must be modified (see “Modifying the CVD Board (79835-66530)” on page 205) or replaced with the current CVD board. Also, the MCGV requires different fittings and outlet capillary. All parts required for modifying the CVD and installing the MCGV are in the MCGV Kit (79835-68721).

NOTE For more information, see service note 01090-066.

Table 28 **MCGV Compatibility**

	CVD 79835-66530 Rev. A	CVD 79835-66530 Rev.B	CVD 79835-66534
MCGV 79835-67701	CVD modification required	CVD modification required	OK

Modifying the CVD Board (79835-66530)

Modification for use with MCD

This modification applies to CVD 79835-66530 Rev. A only.

1 Locate connector J51 on the CVD board.

2 Use a sharp knife to cut the track which connects pin A10 of J51 to pin A12 of J51.

Modification for use with MCGV

This modification applies to CVD 79835-66530 Rev. A and B.
The parts required are in the MCGV Kit 79835-68721.

Replace the power resistors on the CVD board with the resistors supplied

11

Manual Injector

Overview

There were two types of manual injection valves used:

- Rheodyne TM Model 7125
- Rheodyne TM Model 7413.

The Rheodyne Model 7413 is a micro injection valve with an internal loop disc.

Figure 107 **Location of Manual Injector Module**

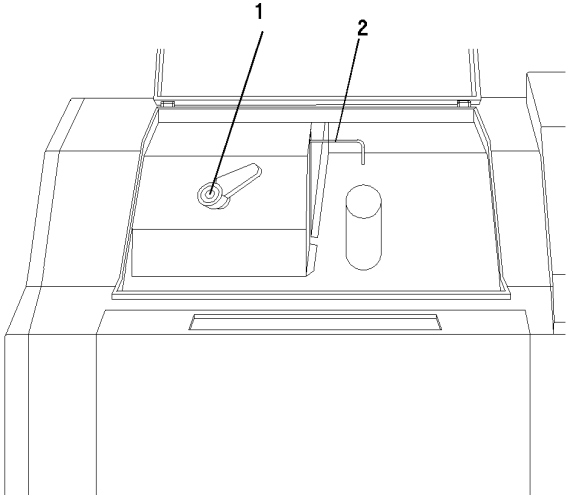

1. Six port rotary valve.
2. Waste outlet.

Manual-injection Valve Model 7125

The pump delivers solvent to port 2 of the six-port rotary valve. During operation (valve in INJECT position) port 2 is connected to the sample loop, port 1 through 4, and solvent flows through the loop and out of port 3 to the column. The loop is always clean and ready to load (see Figure 108).

Figure 108 **INJECT Position**

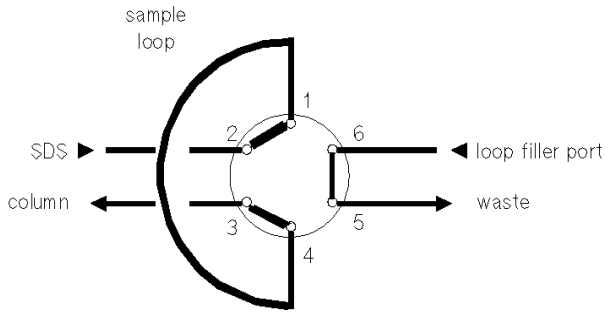

When the valve is turned to LOAD, port 2 is connected to port 3, and solvent flows directly to the column, bypassing the valve. The sample loop is connected to port 6, on the outside of the module. Sample can now be injected into the sample loop. Port 5 is connected to the waste outlet at the right side of the module, and waste liquid may be collected by placing a small beaker below the outlet pipe. The sample loop is full when sample flows out of this outlet (see Figure 109).

Figure 109 **LOAD Position**

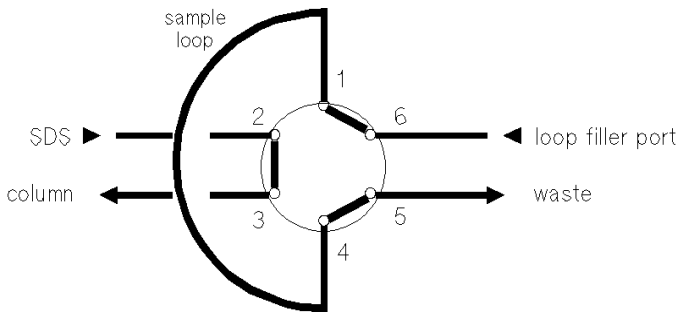

When the valve is returned to INJECT, the solvent flow is connected to the sample loop again and the sample is flushed out to the column as an undiluted plug (see Figure 108).

Manual Micro-injection Valve Model 7413

The manual micro-injection valve, model 7413, is a two-position rotary switching valve. It has an internal loop disc containing three sample loops on the loop disc. The loop disc can be removed and repositioned on the stator for different injection volumes.

The sample lines are free to flow for flushing purposes on both LOAD and INJECT positions. Rotation of the rotor shaft 60° moves the valve from the LOAD (CCW) position to the INJECT (CW) position. The sample loading ports (ports 1 and 4) are closed off when the valve is in the INJECT position.

Two loops of tubing are attached to a disc which is pushed against the back side of the rotor seal. These loops are identical except for length. One of them is the sample loop and is filled with sample through ports 1 and 4 when the valve is in the LOAD position. The other loop acts as the flow passage between ports 2 and 5 when the valve is in the LOAD position.

Connect pump to port 5 or 2, column to port 2 or 5, and sample inlet and outlet lines to ports 1 and 4. The Rheodyne™ Model 7012 loop filler port permits the use of microliter syringes to load the sample with a minimum of wasted sample.

CAUTION

Always flush the sample lines with solvent and/or air each time the valve is turned to INJECT and before returning it to the LOAD position. Adherence to this procedure will avoid a possible unwanted false injection due to cross-contamination.

Loop Filler Port Model 7012

The loop filler port, model 7012, is an accessory for sample injection valves which permits loading the sample loop by means of conventional syringes. The loop filler port is supplied with a fitting and a tube for direct connection to port 1 of the sample injection valve, model 7413.

Figure 110 **Loop Filler Port and Valve**

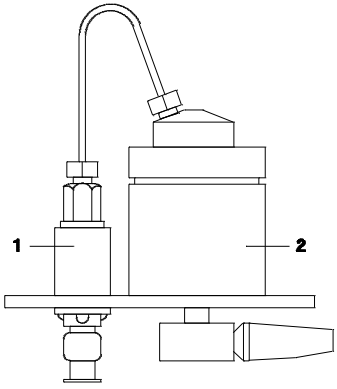

1. Loop filler port.
2. Rheodyne valve.

Figure 111 is an exploded view of the loop filler port. The Teflon™ liner tube and ferrule form a port for the insertion of a syringe needle. Tightening the needle port fitting squeezes the ferrule and constricts the liner tube so that it seals around the needle. When assembled, the Teflon TM liner tube butts against the end of the connecting tube which is 0.012 inch (0.3 mm) i.d.

The preferred needle diameter is #22 gauge (0.028 inch) but the fitting can be tightened to accommodate needles as small as #26 gauge (0.018 inch o.d.). Needles should be at least 1.25 inch (32 mm) long. Any point style can be used, including those with electro-tapers. However, sample waste is reduced by using a square-cut needle end since it abuts the end of the connecting tube without forming a mixing cavity (this is the type of needle required by Rheodyne™ Model 7125 injector).

The open end of the needle port fitting can be attached to the Luer-tip of conventional syringes without needle (Luer-slip or Luer-lok).

Figure 111 **Detail View of Loop Filler Port**

1. Connecting tube.
2. Junction.
3. Spacer.
4. Panel bushing.
5. Teflon liner tube.
6. Teflon ferrule.

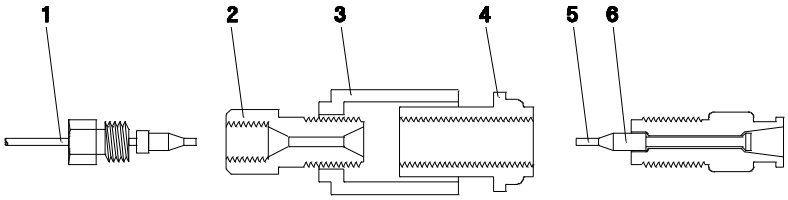

Electronics

A contact closure in the valve creates an electrical signal when the valve is moved to INJECT. Electrical connection is made through a cable attached to plug J452 on the controller motherboard (CTM).

The CTM is connected to the mainframe controller (MCO), where the signal activates a remote-start signal: a 500 ms contact closure between pins 1 and 4 of the REMOTE CONTROL connector at the rear of the HP 1090 mainframe. In Series II instruments, a 500 ms start signal also appears at the remote control interface (RCI).

Figure 112 **Manual Injector Electrical Connections**

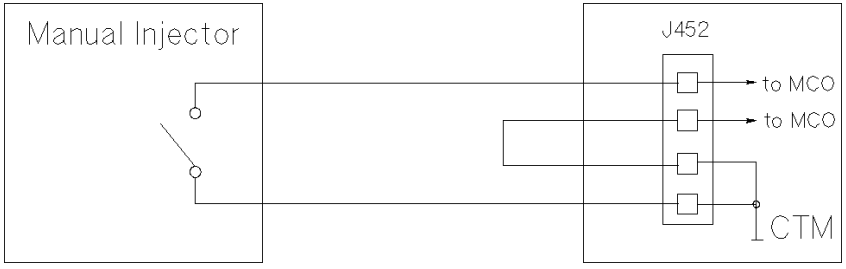

12

Automatic Injector, Column Switching Valve and Pre-Column Derivatization

Overview

The automatic injector is a fully programmable module. The pump delivers flow to a six-port rotary valve in which a sampling unit takes the place of the sampling loop. In the normal mo de, the stainless steel needle of the sampling unit is held firm in its seat, forming a leak proof seal. Before a sample is loaded, the valve directs the solvent through the sampling unit and onto the column. During injection the flow is bypassed and the sampling unit is loaded. Needle and sample loop are always clean and ready for the next injection.

The injection sequence is processor controlled. To avoid malfunction, the injector is mechanically reset after initial turn-ON of the HP 1090. It can also be reset using the RESET INJECTOR instruction. The first step of the injection sequence is switching the rotary valve to bypass. Next, air pressure lifts the needle and an electrically driven swivel arm moves the vial into position beneath it. The air flow is reversed and the needle is lowered. The programmed injection volume is then drawn up into the sampling unit by a metering device, which consists of a syringe driven by a stepper motor. The needle is raised, the vial is moved back and the needle is reseated. The rotary valve returns to its normal position, reconnecting the needle loop to the flow system. All of the sample is pumped out of the injector onto the column.

Flushing, which may be required after solvent change or to remove air out of the metering unit, is accomplished in the following way. The plunger is moved out of the metering device and liquid flow is directed from the detector cell outlet to the rotary valve unit by switching the flush-valve. Liquid flow is now in reverse through the syringe. After flushing is completed, the flush-valve is switched again and the plunger moves back into the front-end position.

Figure 113 **Injector Modes**

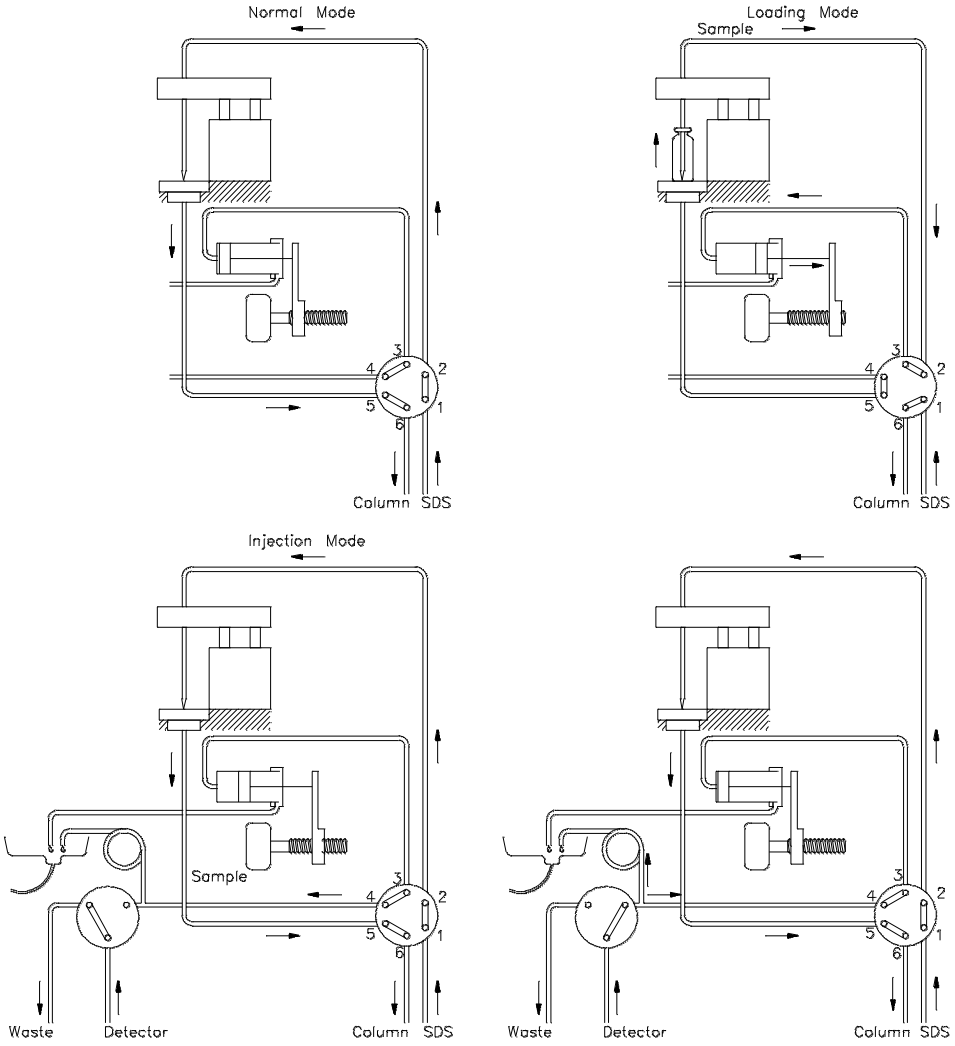

Injection Sequence

The injection sequence is stored in controller memory. For each step of the sequence, a time for execution is assumed. If execution takes too long (time-out) or fails, it will result in an aborted injection and a display of an error message. Each single step of the sequence can be executed solely when the system is brought into the diagnostic state.

Injection Steps

1 Initialize metering system.

2 Switch valve unit to bypass flow.

3 Raise needle.

4 Move bottle underneath needle.

5 Lower needle

6 Draw sample up from sample vial.

7 Raise needle.

8 Move bottle away.

9 Lower needle.

10 Switch valve unit to flow through sample loop.

11 Eject solvent from syringe to waste.

NOTE

The injection sequence can be aborted between steps 1 through 5. Between steps 6 through 11, the injection sequence can be temporarily stopped, but must be restarted, and run to completion.

Column Switching Valve

The column switching valve (HP 79826A) which can be installed into the column compartment of the HP 1090 liquid chromatograph is generally used in two modes of operation; backflushing of a column or switching between different columns. The valve is similar to the injector rotary valve.

Operation of the valve is similar to the valve in the auto injector. A solenoid valve mounted below the needle arm solenoid valve of the injector controls the air supply to the column switching valve. The solenoid valve is also controlled via the injector ICO and ISD boards. Setting a jumper on the ICO is required to indicate to the processor that a column switching valve is installed.

NOTE

The switching of the column switching valve is not monitored by light sensors (see also “Light Switch Monitoring” on page 230).

Further detailed information on operation and capillary interconnections can be obtained from an operating note published by the Hewlett-Packard Company under Publication No. 12-5953-0036, entitled “*Valve Switching in HPLC*”.

Connections

Column Backflushing

Figure 114 **Backflushing the Column**

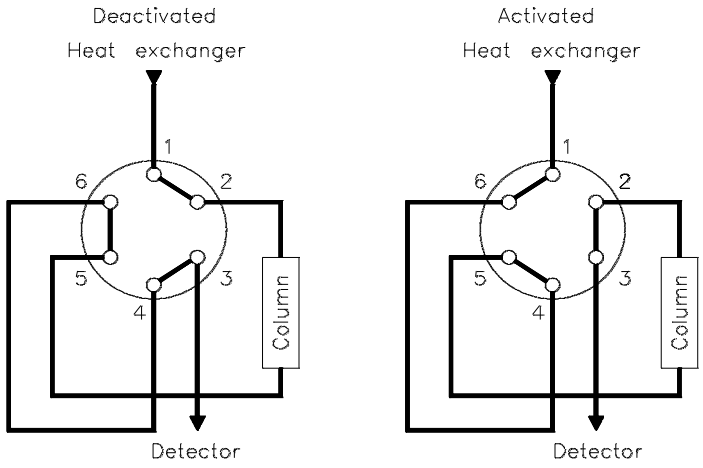

Column Switching

Figure 115 **Column Switching**

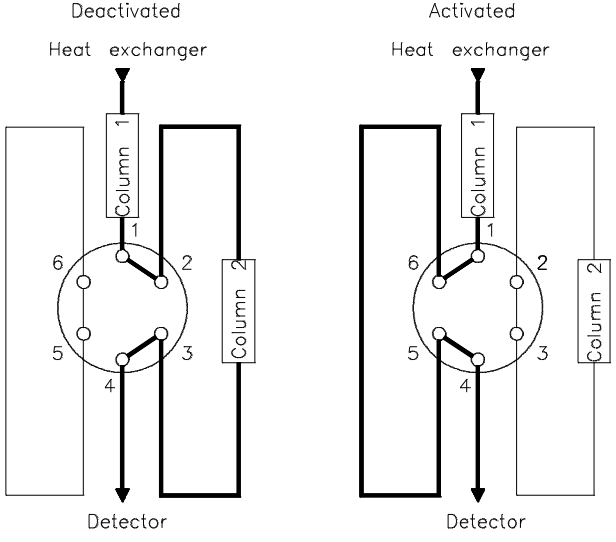

Automated Pre-column Derivatization System (HP79848A)

NOTE The 1090 must have ICO board 79846-66501 Rev. C or later for use with the Automated Pre-Column Derivatization System.

The APDS (micro-oven) consists of a steel capillary coiled around a heating element. The coil and heater are contained inside an aluminium cylinder. An over-temperature switch and a temperature sensor are located on the outside of the aluminium cylinder. The aluminium cylinder is located inside a metal casing which is mounted on top of the needle arm of the automatic injector. The APDS has a total internal volume of 164 µl.

APDS Controller

Temperature Setting

The temperature of the micro-oven is controlled by the micro-oven controller which is located on the syringe cover inside the injector compartment.

The temperature is set using the thumb-wheel switch on the front of the controller. Temperature can be set anywhere between +10°C and +99°C.

CAUTION Ensure that the temperature set on the controller is not greater than the boiling point of the solvent mixture.

When the micro-oven reaches the set temperature, the green READY LED is switched on. If the temperature is not at the set temperature, one of the yellow LEDs is on (HIGH or LOW LED).

Remote Control

The remote setting (switch on controller) enables the micro-oven to be switched on or off from the remote contacts of the 1090. Switching of the external contact can be programmed into the timetable enabling the micro-oven to be switched on or off during a run.

Not Ready

If the temperature of the micro-oven is not at the set temperature, the micro-oven controller is able to send a NOT READY signal to the 1090 controller.

NOTE

To connect the not-ready cable from the micro-oven controller to the 1090, the 1090 must have CTM board 01090-66537 (obsolete) or 01090-66557. CTM 01090-66533 (early 1090 instruments) does not have the connector required for the micro-oven not-ready signal.

Automatic Injector Mechanics

The automatic injector module is located in the upper left hand part in the HP 1090 mainframe. It is mounted with one screw at the front. Two tabs on the rear of the injector module mate with slots in the HP 1090 mainframe.

Only a few connections have to be made. Air supply is connected to the rear of the module. Two capillaries lead from the valve unit to the column compartment and to the solvent delivery system compartment respectively. Two more capillaries are connected from the flush-valve to the right hand side of the HP 1090 mainframe. Electrically, there is a connection made from the injector control board (ICO), mounted on the right hand side of the injector to the controller motherboard (CTM).

Movable parts of the injector are either driven by air or electrically. Air driven parts are the injector needle, the valve unit and, optional, a column switching valve that can be installed inside the column compartment. Air supply is connected from the rear of the module to self-latching solenoid valves. Pressure is sensed for an under pressure condition (< 5 bar) with a sensor that provides an electrical status signal. Damage due to overpressure is avoided by use of a relief valve. When activated, the solenoid moves a cylinder and air pressure moves the respective part into a final position and forces it to stay there. Figure 117 on page 225 shows air connections inside the injector. Air pressure is applied to the P connector of the valves. In normal position pressure is switched to connector A. B is connected to the respective exhaust outlet EB.

When the valve is switched, pressure is connected to B and air can move out through exhaust outlet EA. Both exhaust outlets are connected together at the rear of the injector where air leaves through a filter.

Electrical control of the valves is from the ISD. Parts that are driven with stepper motors are the swivel arm and the piston in the metering device. Control of these devices is from the ISD too.

All final positions are sensed with light switches (except column switching valve) which indicate to the controller whether movements have been completed successfully. There are five light switches in the injector module.

A mechanical switch arrangement senses the position (open, closed) of the injector compartment cover.

Actuator Air Solenoids

Figure 116 **Actuator Air Solenoid**

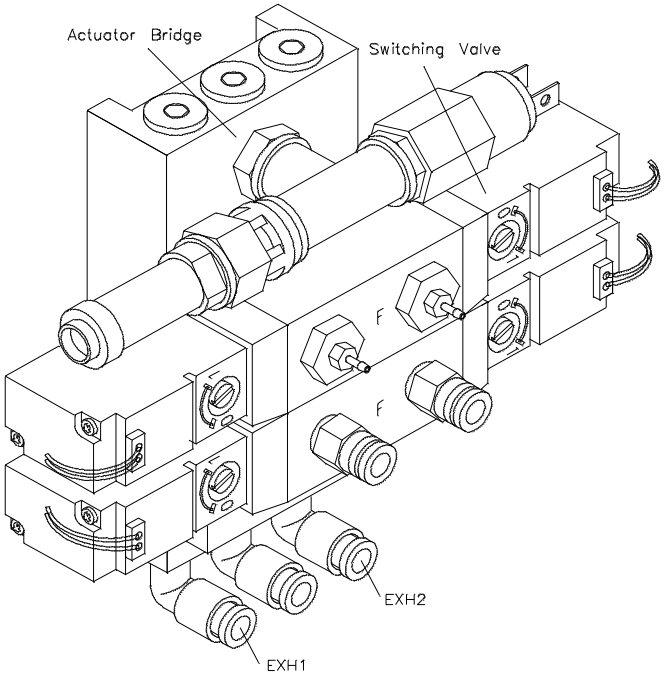

Manual air actuation is done in the following way:

Table 29 **Solenoid Actuation**

Screw A	Screw B	Cylinder#1	Cylinder#2	Comment
0	0	P	V	Relaxed position
1	0	P	V	
0	0	P	V	Solenoid ready for next switch
0	1	V	P	
0	0	V	P	Solenoid ready for next switch

When the injection sequence is under electrical control, the actuator air solenoid assemblies are driven as described above.

Figure 117 **Actuator Air Diagram**

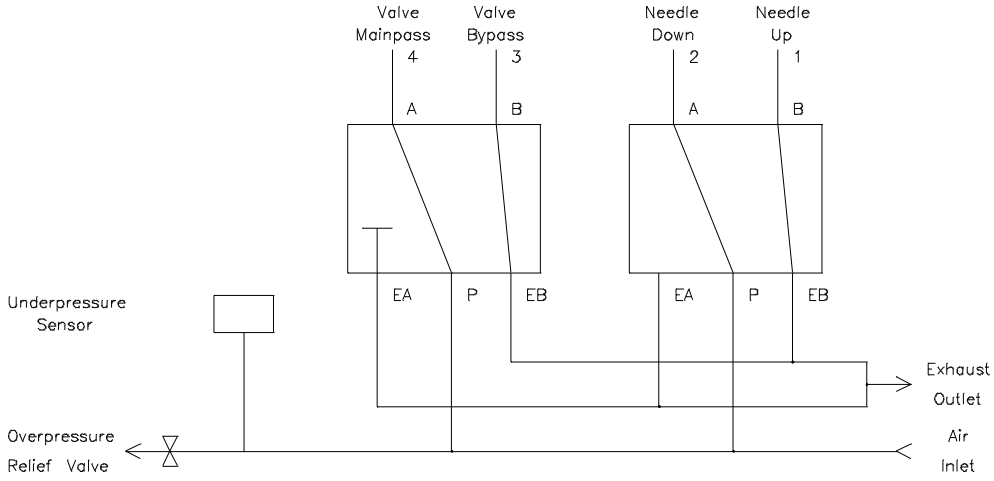

Automatic Injector Electronics

All the information needed to control the injector is transferred through the I/O control circuit on the injector sampler driver board (ISD). With the correct address decoded, data will be written to or read from the respective data storage item. Data for valves or motors are only available during injection or diagnose state. When not addressed, valves and motors are inactive. The configuration setting and the status and position monitoring on the injector controller board (ICO) are always providing signals.

Swivel arm motor and metering motor are driven from the motor driver circuit on the ISD. The valve drive circuit will switch the actuators of injection valve needle cylinder valve, and column switching valve. With every actuation of the injection valve the injection counter is pulsed. Column switching valve actuation is optional and possible at any time of operation. The flush-valve will only be activated with the special flushing procedure.

With two jumpers the controller is fed back about system configuration (OPT1: column switching valve; OPT2: NC).

A PTC resistor, working as a leak sensor, provides a signal which, after being processed in the leak detection circuit, produces a status signal.

The status and position monitoring circuit receives signals from leak detection, cover switch, air pressure lower limit switch and from light switch control. The light switches provide feed back on proper execution of any movement. Their readings are monitored with 5 LEDs on the ISD board, however information is different in normal operation or injection and diagnose state. They should be on all the time during all operations except injection and diagnose state. Otherwise there might be an electrical malfunction.

NOTE

The switching of the column switching valve is not monitored by light switches. There is no feedback to the processor indicating completion or failure of CSV switching.

All valves, motors and sensors are connected to the ISD via a cable leading from the ICO to the controller motherboard (CTM). The ISD plugs onto the CTM. Also all connections to the HP 1090 I/O Bus and the ICO are through this connector.

Figure 118 **Block Diagram AI**

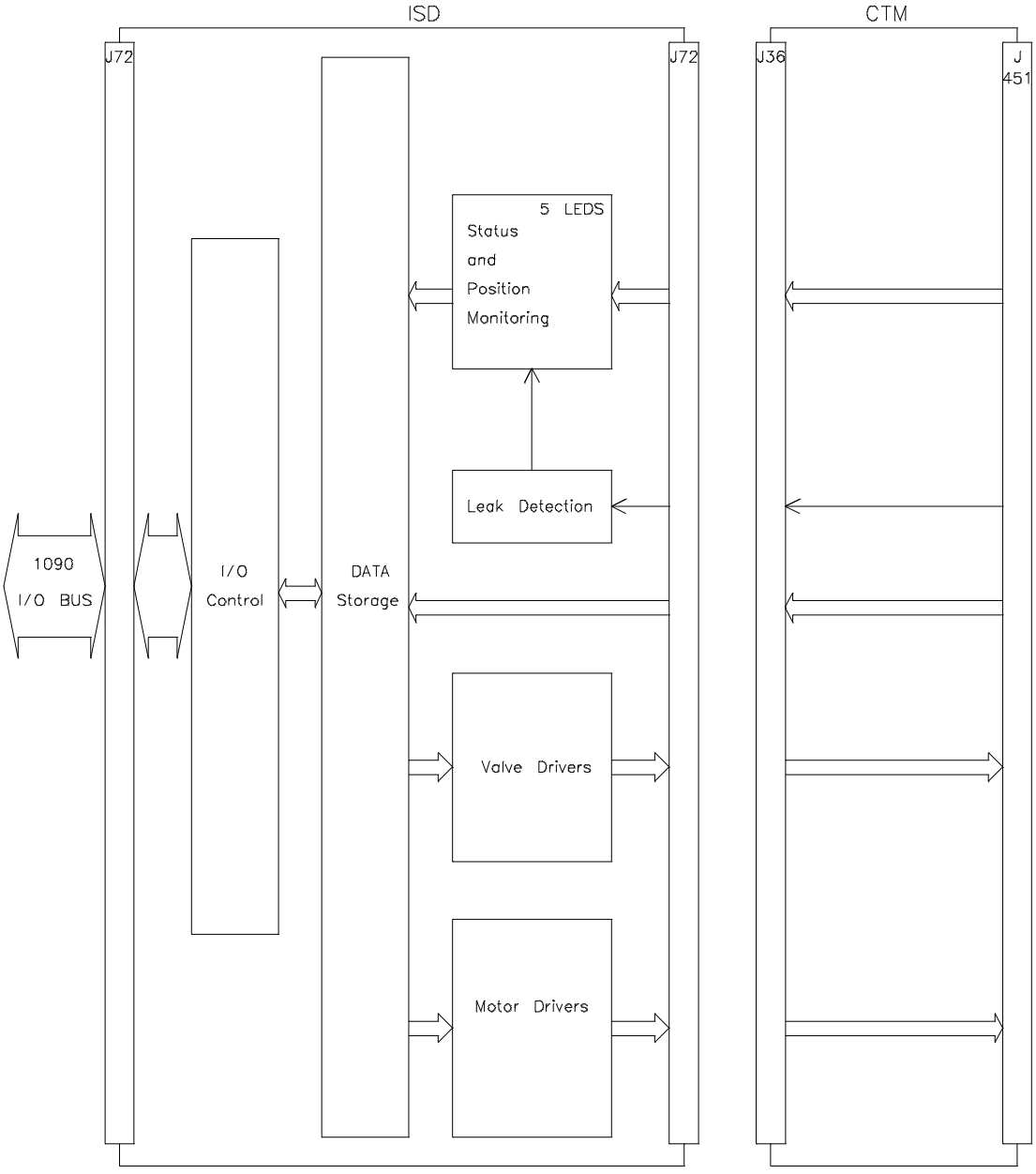

Figure 119 **Block Diagram AI**

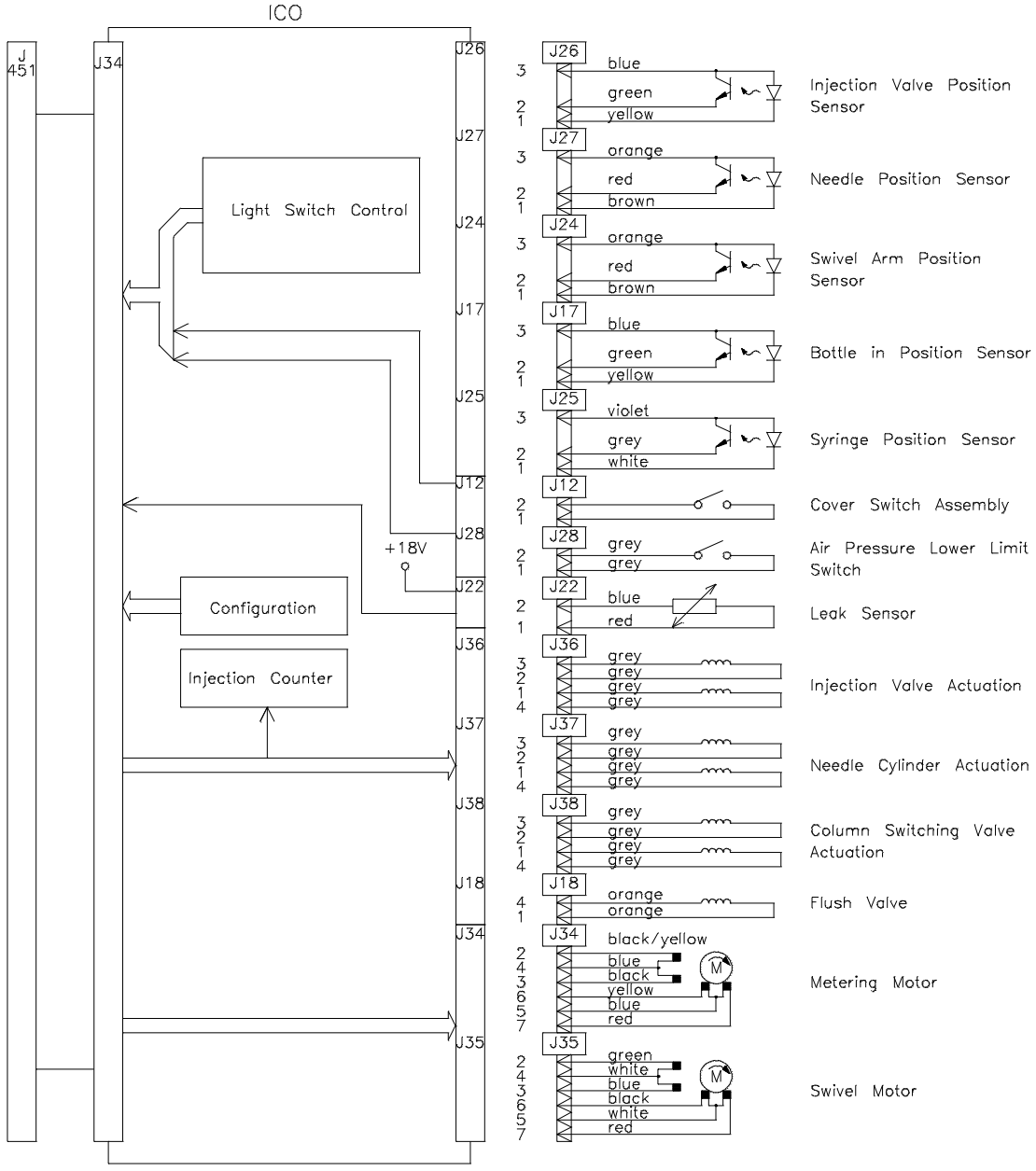

Injector-sampler Driver Board (ISD)

The input/output control consists of a bidirectional buffer and an address decoder with associated gates. When correctly addressed operation of the buffer is enabled and one out of the four data storage items is selected. Data for valve and motor drivers is to be sent to the controller. The SOK (System O.K) signal is used to prevent damage of valves and motors in case of controller malfunction by disabling all inputs. An analog leak sensing signal (LESE) is checked against low level (connection broken) and high level (leak). The malfunction is indicated with a status signal (TP125). Operation of the injector with open top cover is also inhibited with a sensing cover switch (TP124). Operating air pressure is checked with a switch giving a signal when pressure is falling below 5 bar (TP123). Injector configuration is sensed with lines J1, J2, J3. The 5 LEDs of the status and position monitoring provide feed-back on light switch functions.

Two motors can be controlled from the motor driver circuit, which provides three lines for each motor. In addition, four valves can be accessed from the valve driver circuit. Control signals are provided by a single chip.

NOTE A second ISD used for the sampler control.

Light Switch Monitoring

There are five movements in the injector:

- valve unit
- swivel arm
- metering device
- needle arm
- bottle sensor

Each of these movements is monitored by an electro/mechanical light switch circuit.

Figure 120 **Light Switch Monitoring**

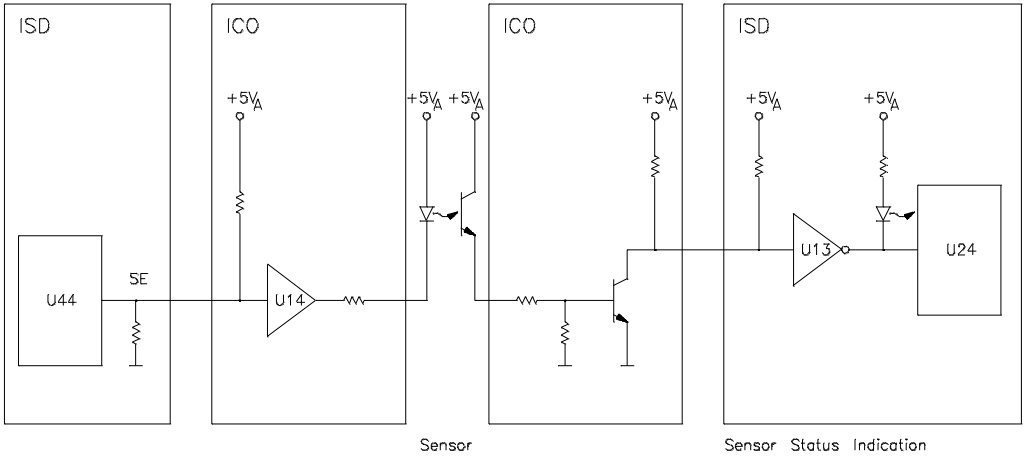

There are two modes of operation, depending on the state of the sensor enable (SE) signal. In normal operation the SE signal is held high. In this state, there is no light emission and the light switch is not operational. The red LED on the ISD board is then turned on. The LEDs on the ISD board are assigned as follows:

LED	Item
1	Valve Unit
2	Swivel Arm
3	Metering Device
4	Needle Arm
5	Bottle Sensor

Further information on LED states during execution of any movement can be obtained from “Diagnostics and Troubleshooting” on page 248.

When the HP 1090 is in the INJECTION mode or in the DIAGNOSE mode, SE goes low. The light switch is now operational. Now, as long as the light switch is on (beam not broken) the ISD LED is out. When the light switch is off (beam broken), the ISD LED is on.

Each of the five injection movements has two states; the *home* position and the *actuated* position. In the home position (such as after RESET INJECTOR), all light switches are on (not blocked). During a particular injection movement, the corresponding light switch is off (blocked). When that movement is completed (actual state) the corresponding light switch is again on.

The HP 1090 main processor must see this ON/OFF/ON transition from the light switch in order to accept this movement and allow the next movement.

The needle arm and valve unit are air actuated movements. These light switches are only used to monitor the correct execution of the movement.

The remaining injector movements are stepper-motor driven. These light switches are used not only to monitor the execution of the movement, but to set the limit of the movement as well.

The light switches themselves are IR devices. To operate, the beam must be positively disrupted by a dark, non-translucent surface. If the injector is operated with the cover open, stray sunlight may cause spurious errors to occur.

ISD Board

ISD Board 01090-66531 (obsolete)

In order to be compatible with a new type of motor, this board was replaced by **ISD 01090-66534** at the end of 1986.

NOTE ISD 01090-66531 is not compatible with the new Berger-Lahr motors (see "ISD Board 01090-66534 (obsolete)" on page 233).

ISD Board 01090-66534 (obsolete)

All instruments with *SN 2422G1197 and above* and *prefix 2607A and above* have the new ISD board installed. The change of the board was necessary to be compatible with the new motors. The new motors need ±12 V voltage supply instead of ±24 V and this was the only change.

The board design was also changed, and an additional connector (for future use) and LED were added. The LED (CR13) indicates the status of fuse F71 (2 A, 2110-0540) on the ISD which protects the +24 V supply:

LED ON	voltage is present
LED OFF	fuse F71 blown or +24 V is not delivered to board

NOTE The board is fully backward compatible and supports both old and new types of motors (see "New Stepper Motors" on page 234 below).

ISD Board 01090-66544

The new version got a 1 A (2110-0007) fuse for the 24 V line. In addition the motor drivers got a new circuit to prevent short circuits during initialization.

New Stepper Motors

All instruments with automatic sampler prefix *2614G* or *2623A* and automatic injector prefix *2617G* or *2639A and above* have new stepper motors installed. This new stepper motors have a higher torque than the old ones which improves the reliability of the auto-injector and sampler.

The following motors were affected:

Table 30 **Motor Part Numbers**

Description	Part Number
Metering Device Motor	79846-67901
Carriage Assembly Motor	79847-67901
Magazine Assembly Motor	79847-67902

The part numbers have not changed. Identification of the different types is quite simple. The old motors are from the vendor *"MOLON"*, the new motors are from the vendor *"BERGER-LAHR"* and have an additional label with the text:

ATTENTION!
use this motor only with ISD-Board 01090-66544

As seen from the table the new motors need the new ISD board. Reason is the ±12 V voltage supply instead of ±24 V for the MOLON type.

CAUTION

The new Berger-Lahr motors will destroy an old ISD board (01090-66531). Therefore, when replacing a motor (or when interchanging sampler/injector ISD boards during troubleshooting), ensure that only ISD 01090-66554 is used with the newer Berger-Lahr motors.

Table 31 **Compatibility Table**

Board version	MOLON (OLD)	BERGER LAHR (NEW)
old ISD board 01090-66531	YES	**NO**
new ISD board 01090-66534/-66544	YES	YES

Figure 121 **Block Diagram ISD**

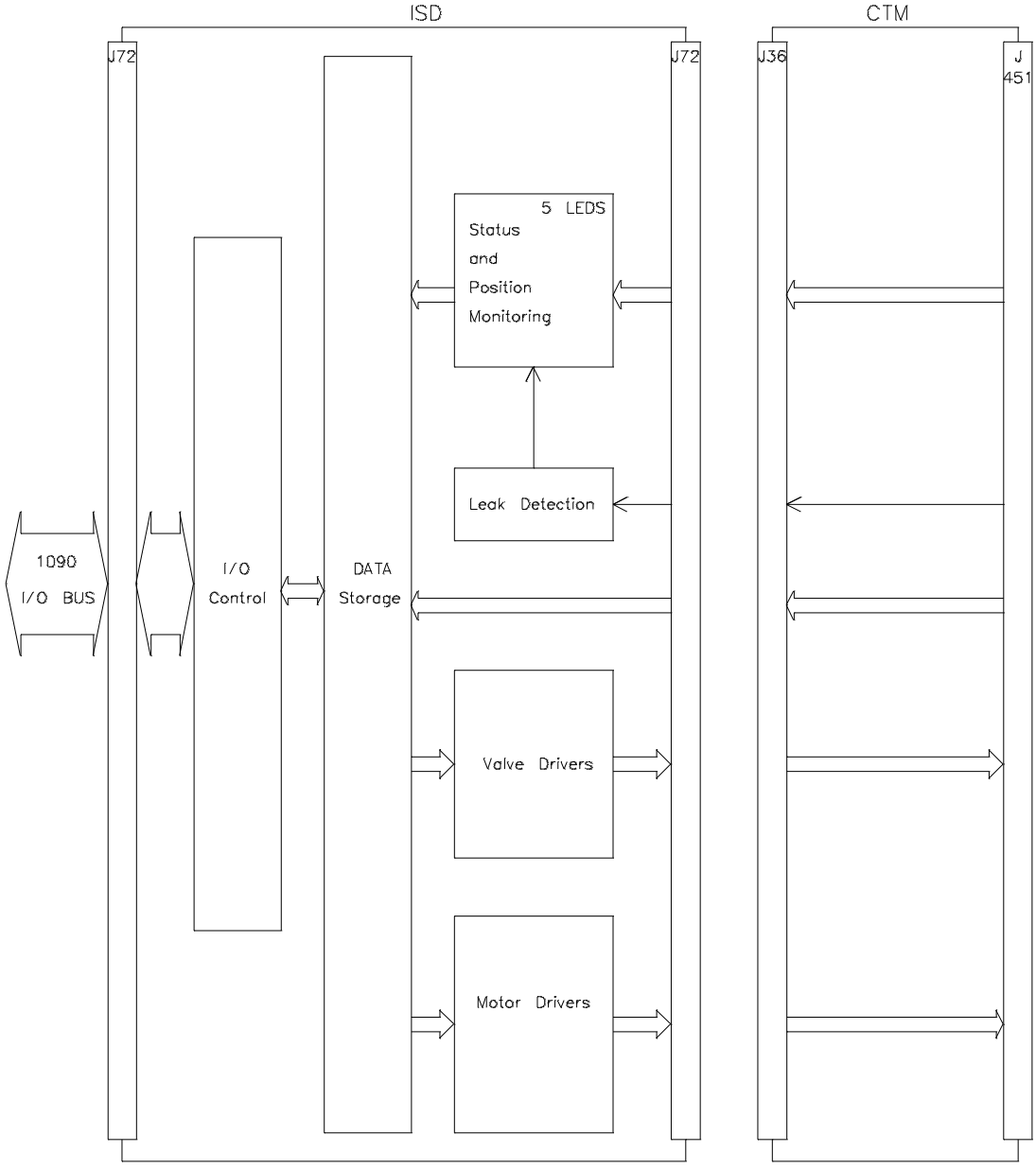

Figure 122 **Board Layout ISD**

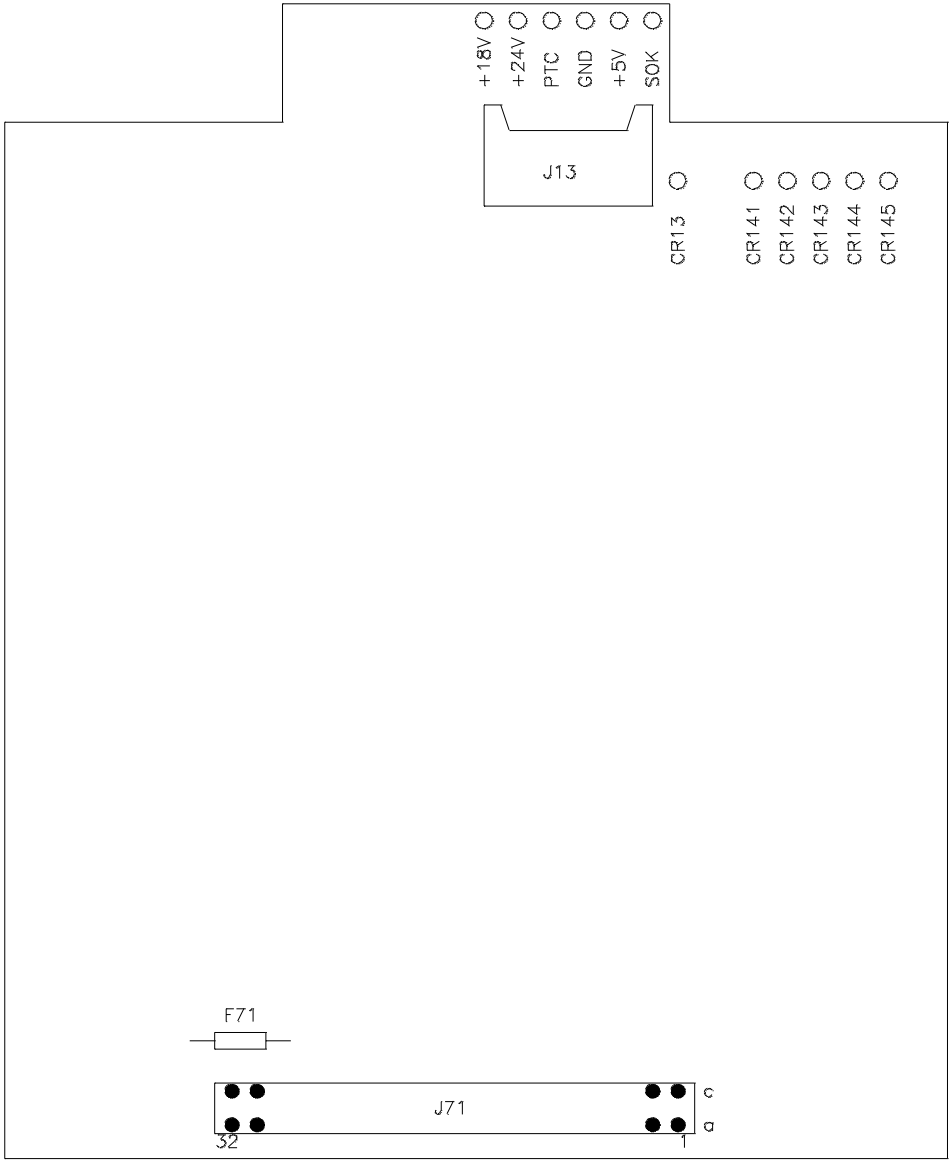

Injector Controller Board (ICO)

The light switch control circuit has two modes of operation. The light source can be switched on for injection or diagnose state, or it can be switched off during normal operation. In either case, a signal is sent to the status and position monitoring circuit on the ISD board.

Two jumpers define the configuration of the injection system. Option 1 must be connected with the column switching valve installed. Option 2 is presently not used.

All other signals from or to the ISD are just transferred to terminating items (valves and motors).

A mechanical injection counter displays the actual number of injections.

NOTE

For safety reasons the new cover-switch assembly (79846-67903) has two independent switches (double check that cover is closed). Therefore the ICO has been modified.

HP 1090s with *S/N 2422G00759 to 2422G00800 inclusive* or *Prefix 2451A and greater* have new cover-switch assemblies (*79846-67903*), but no modified ICO. Only one of the two cover switches is connected.

HP 1090s with *S/N 2422G00801 and above* or *Prefix 2525A and greater* have new cover-switch assemblies (*79846-67903*) and the modified ICO. Both cover switches are connected.

Repair

If the ICO board fails, and the automatic injector has only one switch installed, solder the jumper into position otherwise the Error Message EI 31 will be generated.

Figure 123 **Block Diagram ICO**

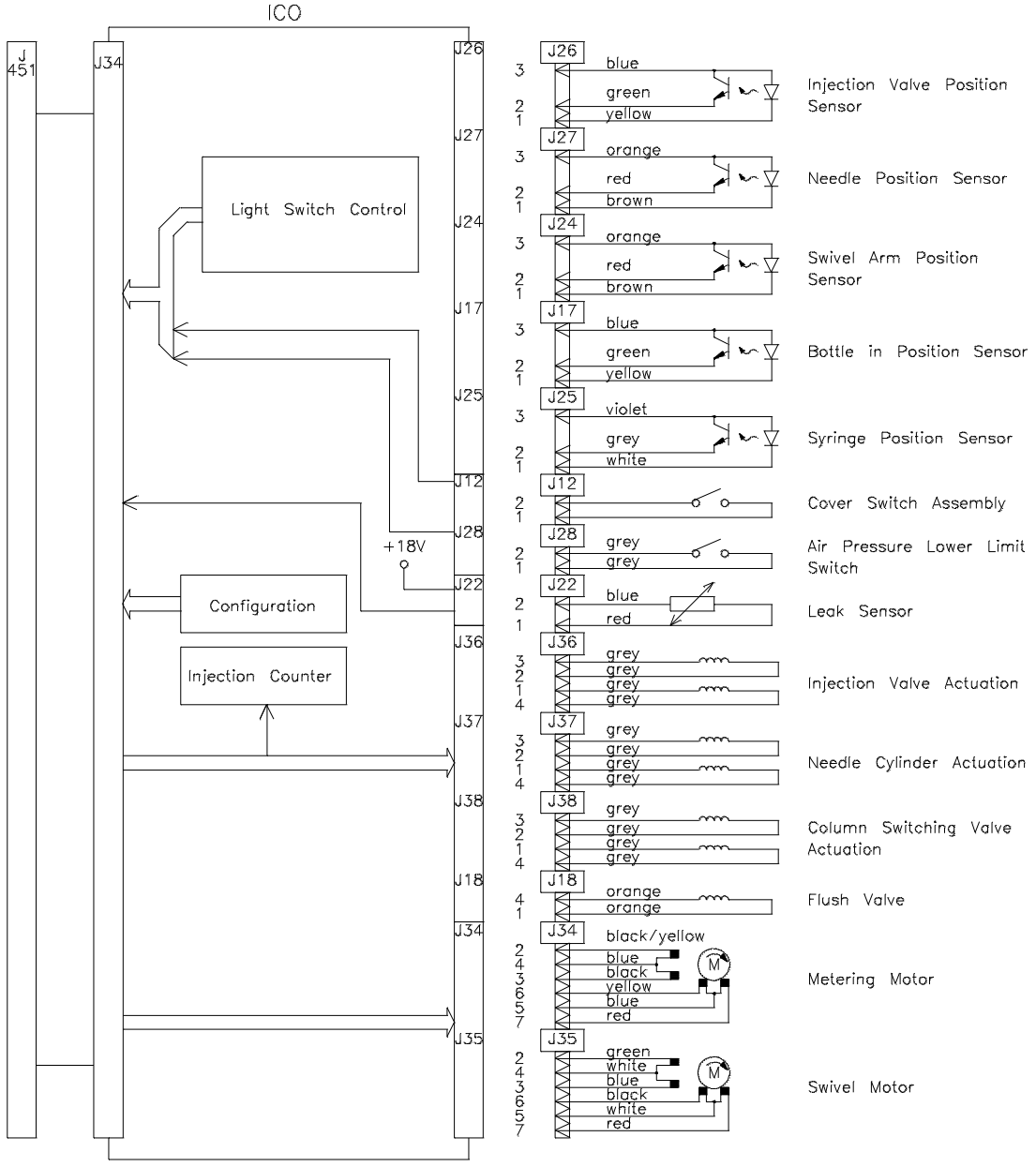

Figure 124 **Board Layout ICO**

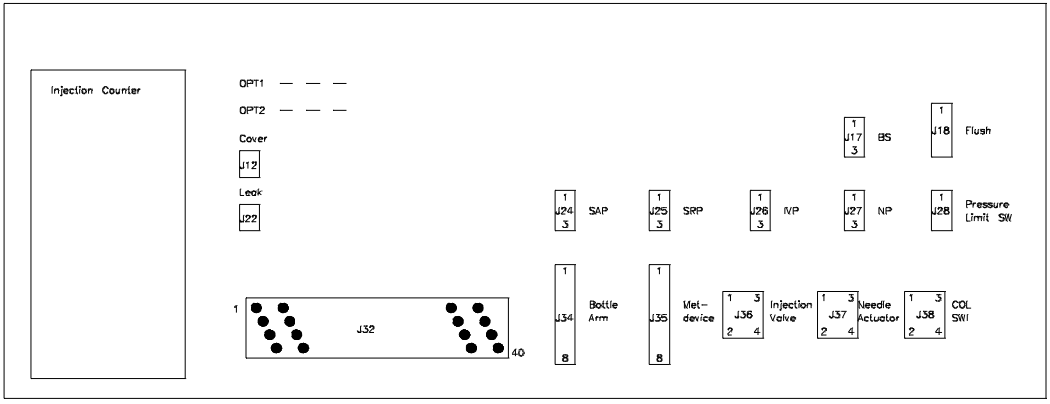

Procedures - Replacing the Valve Unit Rotor Seal

Replacing the Valve Unit Rotor Seal

There are two seals available:

1535-4048	pH 2.3 - 9.5
1535-4900	pH 2.3 - 12.5 (extended pH range)

Replacing the Seal

1. Remove cover over valve unit and metering unit.
2. Remove swivel arm. Disconnect all capillaries from valve head. Move metering unit into a vertical position.
3. Loosen the screws fixing the valve head to the valve body. Loosen stepwise, do not open one screw completely.

CAUTION Never turn or adjust the setscrews.

4. Remove valve head, valve body and then rotor seal. Take care not to lose the two pins in the valve body.
5. Insert new seal with notch pointing in the same direction as the pin in the rotor and with grooves facing towards you.
6. Install valve body and valve head. Insert screws. Tighten the screws stepwise, ensuring that the valve head remains parallel to the valve body.

NOTE A maximum torque of 1.5-2.0 Nm should be sufficient to make the seal pressure tight up to about 430 Bar. Excessive torque will reduce the lifetime of the seal.

7. Reconnect all capillaries. Bring back metering unit into a horizontal position and fix screw.
8. Perform function test and pressure check described as described in “Pressure Check” on page 241.

9 If the valve is not pressure tight, tighten the fixing screws slightly, and check for pressure tightness once again.

Pressure Check

1 Hold down the cover switch and power up the instrument. Check proper execution of the turn-on reset of the injector and sampler. With pump off and injection volume set to zero make one injection each with bottle in position 29 and 99. Stop the run after the injector is successfully completed.

2 Plug capillary inside the Column Compartment. Set flow to 0.5 ml/min and start pump.

3 Wait until SDS is switched off by overpressure. Check pressure stability. Pressure drop after 2 minutes should not exceed 10 bar per minute. Release system pressure slowly.

Procedures - Replacing Motors

CAUTION

Check for compatibility between the motor and the injector ISD board. If necessary, replace the ISD board (see “Injector-sampler Driver Board (ISD)” on page 230).

Swivel Arm Stepper Motor

After replacing the Swivel Arm Motor, check the adjustment of the swivel arm. Adjust if required (see “Adjusting the Swivel Arm Sensor Board” on page 243).

Procedures - Sensor Adjustments

NOTE

For some light sensor adjustments, extender cable 01090-67610 is required. This cable enables operation of the injector outside of the 1090, and allows easy access to sensors.

Adjusting the Valve Unit Sensor Board

1. Power system up and enter DIAGNOSE mode.
2. Program STE12 to activate light switches.
3. Adjust sensor that LED 1 on the injector sampler driver board (ISD) is off.
4. Move valve to bypass position with STE2. LED 1 should briefly turn on and then off again. Adjust the sensor if required.
5. Move valve into normal position with STE10.
6. Reset injector and press STOP to leave diagnostic state.

Adjusting the Swivel Arm Sensor Board

1. Remove the injector module from the 1090.
2. Connect the extender cable 01090-67610 from the injector module to the CTM.

CAUTION

Ensure the extender cable is connected with the correct orientation (RED to RED!). If not, switching on the 1090 will destroy the ICO.

3. Power system up and enter DIAGNOSE mode.
4. Enter STE3 to move needle up.
5. Enter STE4 to move the swivel arm underneath the needle. It should touch the two pins.
6. if the swivel arm hits the two pins before the motor movement is complete, move the swivel arm away with STE8, and readjust the sensor.
7. Check the swivel arm position again with STE4. Repeat this procedure until proper alignment is reached.

8 Move arm out with STE8.

9 Lower the needle with STE9.

10 Reset injector and press STOP to leave diagnostic state.

Adjusting the Needle Arm Sensor Board

1 Power up the system and enter DIAGNOSE mode.

2 Activate light switches with STE12.

3 Adjust holder so that LED 4 is off.

4 Move the needle up with STE3. LED 4 should turn on briefly and go off again.

5 Lower the needle with STE9.

6 Reset injector and press STOP to leave diagnostic state.

Procedures - Installing the Column Switching Valve

Installing the Valve

1. Switch off detector and pump at the front panel.
2. Switch HP 1090 to off at the front panel.
3. Turn line power switch at the rear of the HP 1090 to off. Disconnect line power cable.
4. Disconnect air pressure from injection system.
5. Remove the four screws fixing the top cover to the HP 1090 mainframe. Lift the cover up and set it aside.
6. Disconnect GPIB cable from rear of the HP 1090.
7. Remove rear panel and set it aside.
8. Remove swivel arm from injection system.
9. Remove two covers located over the injection system.
10. Remove protection cover located over the oven interface board (OVI) at the left hand side of the column compartment (heated compartment only!).
11. In case an automatic sampler is installed remove four screws fixing the sampler onto injector.
12. Lift sampler up, disconnect ribbon cable from controller motherboard (CTM) and set it aside.
13. In case no sampler is installed remove protection cover from injector.
14. Remove insulation plug from left hand column compartment wall.
15. Install switching valve such that the valve shows into the compartment. Affix it with two screws on sheet metal of column compartment accessible from OVI board side.
16. Remove green air tubing from air inlet to manifold (most down connector) inside injector.
17. Remove cover of the lowest position of the manifold, loosening the mounting screw.

18 Check that the three O-rings are clean and still in place.

19 Install solenoid valve with label facing up (similar to the valves that drive the injector) and fix with mounting screw (for easier fixing a small amount of grease is recommended, see parts ID “Column Switching Valve” on page 411).

20 Affix manifold with four screws to injector frame.

21 Connect air inlet tubing to manifold.

22 Connect air tubing labelled 5 from solenoid position front to switching valve position rear.

23 Connect air tubing labelled 6 from solenoid position rear to switching valve

24 position front. Both tubings use the same way as the ones for the injection valve.

25 Install protection cover over OVI. Green tubing labelled 5 has to go underneath this panel (only for old cover; for new cover the green tubing has to be on top!).

26 Connect cables from solenoid valve to injector connector board (ICO) and affix with cable ties.

27 Solder or plug (depending on ICO revision) the jumper into position OPT#1 on ICO (see Figure 125).

Figure 125 **Board Layout ICO**

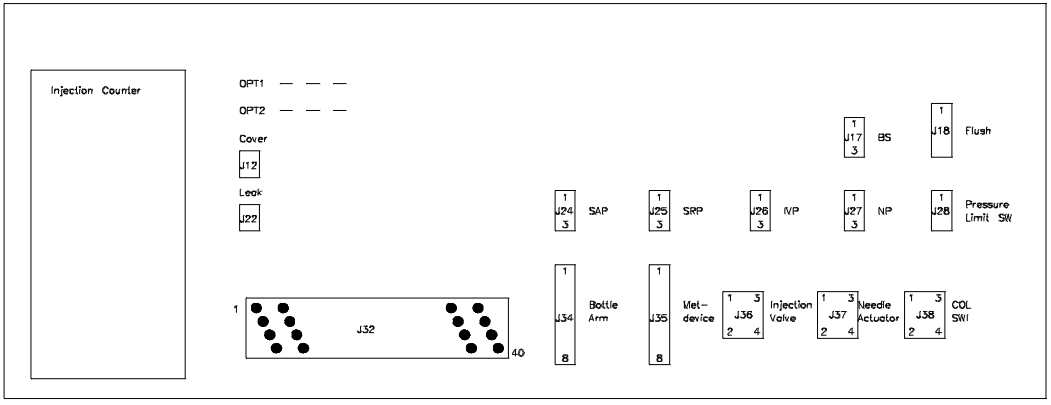

28 Connect air pressure and check for air leaks.

29 Install sampler or protection cover onto injector and connect ribbon cable to CTM (sampler only!). Affix with four screws.

30 Install rear panel.

31 Connect line power cable to 1090.

32

33 Turn line power switch to on, push POWER ON key at the system keyboard.

34 Connect GPIB cable to rear of HP 1090.

35 Load system software and run. Check correct boot-up.

36 Select LC-screen. In this screen the line COLUMNSW 0 should appear.

37 Program COLUMNSW 1 and back to COLUMNSW 0 several times to check proper function of column switching valve.

38 In position COLUMNSW 0 ports 1 and 2, 3 and 4, 5 and 6 are connected. In position COLUMNSW 1 ports 6 and 1, 2 and 3, 4 and 5 are connected.

NOTE If activated in a time table, the position of the valve is shown in the ANALYSIS screen of the HP-85 in RUN mode.

39 Install the two protection covers over the injection system.

40 Insert swivel arm.

41 Put top cover back onto HP 1090 mainframe. Take care not to squeeze air tubing at the left hand side. Also the rear panel has to go underneath and inside the top cover. Affix the top cover with four screws.

Diagnostics and Troubleshooting

Step Commands

There is a set of instructions that allows stepwise execution of the injection sequence. These instructions can only be executed in diagnostic state. A number is associated to each respective action. A second instruction will be rejected until the first one has been completed successfully or has fallen through the time-out. The ANALYSIS NOT READY LED is on during execution of each step. If an error occurs the ERROR LED is switched on additionally and a message is displayed on the user interface (LUSI or ChemStation).

Table 32 shows the step commands ("STEn") and their respective movement.

Table 32 **Step Commands**

Ste=	Action
1	initialize syringe
2	valve to bypass
3	needle up
4	swivel arm in
5	needle into vial
6	suck up sample volume
7	needle out of vial
8	swivel arm out
9	needle down on seat
10	valve to main pass
11	syringe plunger to front position
12	activate light switches
21	magazine initialization
22	carriage to select vial position
23	magazine to select vial position

Table 32 **Step Commands**

Ste=	Action
24	magazine to home position
25	carriage to home position

NOTE STE12 is the recommended diagnostic for determining the integrity of the electro/mechanical functions of all (5) injector light switches.

Entering the Diagnose Mode

From Pascal ChemStation

The injector and sampler step commands are located in *Data Acquisition* in the *Diagnose* screen. Use [*Next*] or [*Previous*] to select the command. Press [*Execute - Command*] to execute the step.

For more information, refer to the ChemStation documentation.

NOTE To activate all light switches (equivalent to STE12 command in LUSI), execute the *Initialize Syringe* command.

From MS-DOS ChemStation

For more information, refer to the ChemStation (DOS Series) Handbook "*The Commands*".

The Step Commands can be entered by typing the command onto the Command Line and then pressing the [*Enter*] key as follows:

1. Select the System menu box in the upper-left corner of the Top Level window.
2. Select *Cmdline On* from the System menu.

   When the Command line is on, it appears at the bottom of the *Top Level* screen.

NOTE If both the Message line and the Command line are on, the Command line is displayed below the Message line.

3. Type in *LCINJSTEP n*, where "n" represents the step (see Table 33 on page 250).

Example

To activate the light switches, type: *LCINJSTEP 12*

Table 33 **LC INJSTEP Commands**

Variable	Description
1	Initialize syringe
2	Switch injection valve to bypass
3	Needle up (no vial under)
4	Swivel arm in (vial 100 under needle)
5	Needle down into vial
6	Draw volume of sample specified
7	Needle out of vial
8	Swivel arm out (vial 100 away)
9	Needle down on seat
10	Switch injection valve to main pass
11	Syringe plunger to front position
12	Activate photo sensors
15	Deliver specified sample volume
21	Initialize magazine
22	Move carriage to selected magazine
23	Move magazine to selected vial
24	Move magazine to home position
25	Move carriage to home position

From LUSI

The HP 1090 can be returned from diagnostic state at any time by pressing [*Stop*] at the keyboard.

To enter the diagnostic state, type in the following key sequence from the *status screen*:

1 [*Shift*] *[Ctrl*]

2 [Shift] [Alpha] (selects the “Alpha” mode).

3 [I] [Enter] (selects the injector diagnose screen).

Now you can type in the step commands:

4 [Shift] [Alpha] (selects the "Alpha" mode).

5 [S] [T] [E] [=]

6 [Shift] [Alpha] (returns to "Numeric" mode).

Now enter the step required, for example, step 12 (activate light switches):

7 [1] [2]

8 [Enter]

To enter a second command, use the [◀]; or [▶]; keys to move the cursor, and type over the step number displayed.

Using the Step Commands

1 Enter *STE12* or *Initialize Syringe* to activate the light switches.

2 Check the red LEDs on the ISD board (injector drive position).

All five of the LEDs should be off. If a particular LED is on at this time:

- Either the corresponding injector movement is not in the "home" position;
- or the corresponding light switch has failed;
- or the ISD board has failed.

3 If all ISD LEDs are off, test each of the five light switches in turn (manually or automatically). The corresponding ISD LED must come on when the light switch beam is blocked.

LED Patterns on ISD

Table 34 shows the LED pattern during the execution of a step command.

Table 34 **LED pattern during step execution**

STE=	Comment:
1	LED 3 briefly ON then OFF
2	LED 1 briefly ON then OFF
3	LED 4 briefly ON then OFF
4	LED 2 briefly ON then OFF
5	LED 4 ON immediately.
When bottle sensor is activated, LED 5 turns on too.	
6	No change on LED states, only the syringe moves according to the selected volume.
7	First LED 5 OFF then LED 4 OFF
8	LED 2 briefly ON then OFF
9	LED 4 briefly ON then OFF
10	LED 1 briefly ON then OFF
11	LED 3 briefly ON then OFF
12	All LEDs OFF when all items are positioned correctly (light sources of light switches are turned on)

Table 35 shows the LED pattern after execution of a step command.

Table 35 **LED pattern after step execution**

STE=	LED 1	2	3	4	5	Comment:
1	0	0	0	0	0	initialize syringe
2	0	0	0	0	0	valve to bypass
3	0	0	0	0	0	needle up
4	0	0	0	0	0	swivel arm in
5	0	0	0	1	1	needle into vial
6	0	0	0	1	1	suck up sample
7	0	0	0	0	0	needle out of vial
8	0	0	0	0	0	swivel arm out
9	0	0	0	0	0	needle down on seat
10	0	0	0	0	0	valve to main pass
11	0	0	0	0	0	syringe plunger to front position
12	0	0	0	0	0	activate light switches

0 LED OFF

1 LED ON

Troubleshooting The Column Switching Valve

There is one error message that can be investigated through troubleshooting:

EI30 INJ ERROR Column Switching Valve not installed

Plug J38 is located on the ICO board. To get to the board, remove the HP 1090 top cover. The ICO board has an injection counter at the top. The location of the plug J38 is shown in Figure 124 on page 239.

NOTE

On the ICO board are located two configuration jumpers (OPT 1 and OPT 2). If EI20 is present, check for the jumper. OPT 1 is the one for the Column Switching Valve.

13

Automatic Sampler and Temperature-Controlled Autosampler

Automatic Sampler Overview

Theory Of Operation

The automatic sampler, combined with the automatic injector, allows fully automated operation. Up to 100 bottles can be randomly accessed and analyzed in any sequence, with any method. Ten bottles can be stored in one magazine; up to 10 magazines find their place in the carriage. Injection from any bottle uses the same injection sequence as with the swivel arm unit, except that the programmed bottle from the automatic sampler is moved underneath the needle instead of the one from the swivel arm unit. To avoid errors in operation, the carriage always returns to the initial position prior to moving the selected bottle underneath the injector needle. The initialization also takes place during initial turn-on of the HP 1090 or during execution of the RESET_INJECTOR command. All movements are checked with light switches. Operation and control of the light switches is the same as described for the Automatic Injector. A BCD-coded bottle number is available at a BCD-output connector at the rear of the HP 1090 (for pin connection see controller motherboard CTM, GPIB section).

Temperature-controlled Autosampler

The mechanics and electronics of the Temperature-Controlled Autosampler (TCAS) are based upon the standard autos ampler. In addition, a heat exchanger and fan provide circulation of cooled air inside the TCAS cover. The heat exchanger is cooled by coolant circulated by an external cooling bath.

Operation

Coolant from the external cooling bath is circulated through the heat exchanger at the rear of the HP 1090. A 24 VDC fan connected to the external contacts interface (24 VDC contact) circulates air across the heat exchanger and through the TCAS compartment. The cover of the TCAS, and insulation in the base of the TCAS provide a well insulated environment for the sample vials.

NOTE

The cooling bath is not supplied by Hewlett-Packard. It is the customer's responsibility to provide a suitable cooling bath.

Because of the thickness of the TCAS cover, magazine #10 (vials 90 - 99) cannot be used. Vials can only be inserted in positions 0 - 89.

Environment

The environment in which the TCAS is used should not cause excessive condensation to occur (e.g. very humid environment). However, a drip tray and protective covers below the TCAS prevent condensation dripping inside the 1090 mainframe. Condensation which drips into the drip tray runs out to a channel at the rear of the 1090. Also, the light sensors of the TCAS are protected by a plastic coating on the sensor boards. These sensors have different part numbers to the sensors of the standard autosampler.

CAUTION Never use the TCAS without the drip tray and protective covers in place.

Automatic Sampler Mechanics

Mechanical Assembly

The automatic sampler and TCAS mount onto the automatic injector. The mechanical assembly on which the carriage moves is fixed with four screws on the injector frame.

Carriage and magazine are both driven by stepper motors. Feed back on actual position is made by light switch control. Depending on this reading, the controller provides pulses to the stepper motors.

Motor Mounting and Alignment Changes

Beginning in January 1986 some HP 1090 sampler design changes were implemented. These changes are meant to make it easier to replace and align the light switch board and motors in the field.

These changes do not create any new part numbers or repair policies. Also, no HP 1090 serial number break has occurred.

NOTE

The newly designed light switch boards are fully backward compatible. It is important to note, however, that the new alignment features and improved serviceability are the result of changes in the sampler mainframe as well as in the light switch boards. Therefore, older samplers cannot be upgraded with these alignment and serviceability features.

Previously, motor position was fixed by screws and round holes. This arrangement did not really provide for alignment of the carriage motor gear/toothed rack, which may be required in the field. Also, there was no clear way to adjust belt tension, although this has not been a common field requirement.

Figure 126 on page 259 shows the new design for motor mounting. Slots have been added to the drive assembly frame and a stand-off/nut fastener has been incorporated. Both motors can now pivot through a slot around one fixed screw.

To align the motor, simply loosen both holding screws on the motor in question; do not remove the screws as this will cause the stand-off/nut fastener to fall out. Pivot the motor to achieve the best gear/toothed rack alignment or the desired belt tension.

Figure 126 **Motor Mounting**

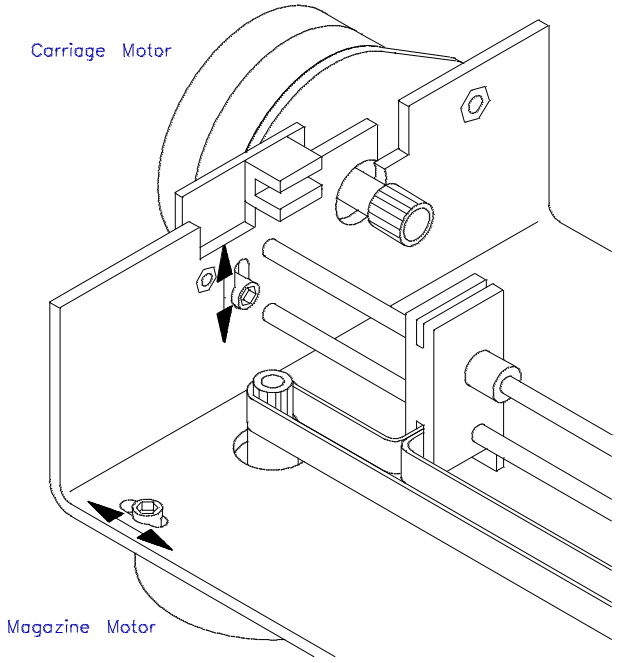

Electronics

Electrical Control

All the information needed to control the sampler is transferred through the I/O control on the injector sampler driver board (ISD). With the correct address decoded, data will be written or read from the respective data storage item. Data for motors are only available during injection or diagnose state. When not addressed, motors are inactive. The configuration setting and the status and position monitoring circuits on the sampler controller board (SCO) always provide signals.

Magazine motor and carriage motor are driven from the motor driver circuit on the ISD.

A BCD-coded bottle number is available at the controller motherboard (CTM) for external use.

The status and position monitoring receives signals from light switch control. Four light switches provide feed-back on proper execution of any movement. Their functions are monitored with 4 of the 5 LEDs on the ISD board (sampler slot).

Injector-sampler Driver Board (ISD)

The ISD board for the autosampler slots into the rear ISD slot on the CTM. For more detailed description of the ISD board, refer to the auto injector section.

Light Switch Monitoring

There are two movements in the autosampler:

- Carriage
- Magazine

Each of these movements is monitored by an electro/mechanical lights witch circuit.

Figure 127 **Motor Mounting**

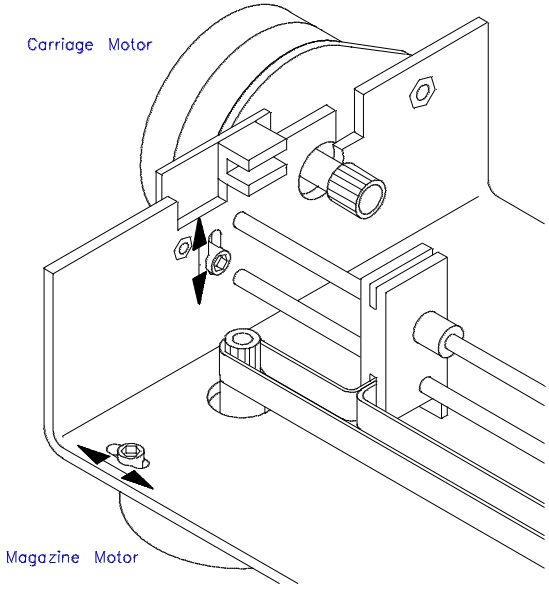

There are two modes of operation, depending on the state of the sensor enable (SE) signal. In normal operation the SE signal is held high. In this state, there is no light emission and the light switch is not operational. The red LED on the ISD board is then turned on. The LEDs on the ISD board are assigned as follows:

LED	Item
1	Magazine (Initial Position)
2	Carriage Position
3	Carriage Position
4	Magazine (Selected Position)
5	Unused

Further information on LED states during execution of any movement can be obtained from “Diagnostics And Troubleshooting” on page 272.

When the HP 1090 is in the INJECTION mode or in the DIAGNOSE mode, SE goes low. The light switch is now operational. Now, as long as the light switch is on (beam not broken) the ISD LED is out. When the light switch is off (beam broken), the ISD LED is on.

The HP 1090 main processor must see this ON/OFF/ON transition from the light switch in order to accept this movement and allow the next movement.

The lightswitches themselves are IR devices. To operate, the beam must be positively disrupted by a dark, non-translucent surface. If the sampler is operated with the cover open, stray sunlight may cause spurious errors to occur.

Further details of operation of the ISD and the general operation of the lightswitches can be found in the auto injector section, see “Injector-sampler Driver Board (ISD)” on page 230.

Sampler Light Switches

Figure 128 shows the three light switch assemblies: The vial count sensor (VCS), the magazine in place sensor (MIP) and the carriage position sensor (CPS).

Figure 128 **Location of Light Switches**

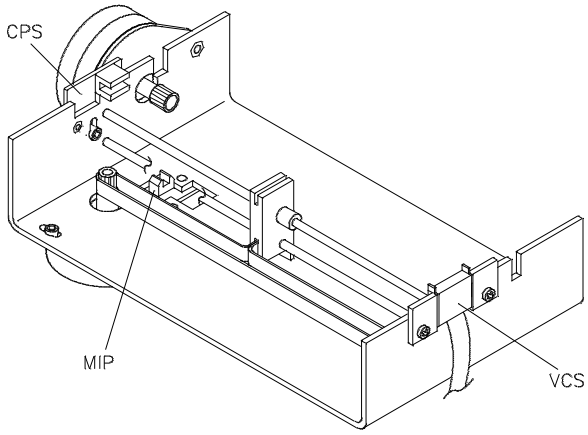

CPS

The CPS determines the home position for the carriage assembly. “Home” is when both light switches in the CPS are on (conducting). This occurs only when the dual slots portion of the toothed rack is in the CPS. In other words: the home position of the carriage always positions magazine holder #0 to be driven under the injector arm. If the CPS is positioned correctly, any magazine holder selected will be able to move out to the injector without bumping into one side of the VCS or bumping into one of the two sample arm stops on the injector. If this problem is noted, a left/right alignment of the CPS is needed.

The CPS has changed shape to allow it to be replaced/aligned without disturbing the position of the carriage motor. The new design contains slotted screw holes and is fully backward compatible.

MIP

The MIP determines the home position of the magazines by sensing the beam breaking tab on the magazine advance. Tolerance for correct position of the MIP is small due to the relationship of the carriage assembly and sampler frame assembly. The MIP too far to the rear may cause an error EI25. The MIP too far to the front may cause magazine holder #0 to catch on the drive frame assembly, preventing movement of the carriage.

The MIP now has slotted screw holes for easier alignment if needed. Note that front/back alignment of the MIP is actually made possible by a change (enlargement) in the MIP hole in the drive assembly frame. Also, the MIP board can be replaced/aligned without disturbing the position of the magazine motor.

VCS

The VCS counts the vial number by sensing the vial counting slots in the magazine holder as the holder moves forward. The VCS also determines the actual stopping point of the magazine holder. Therefore, the VCS position must be correct to obtain a good needle/vial alignment.

Sometimes it is necessary to “shim” the VCS slightly away from the drive assembly to correct a needle/vial misalignment.

Figure 129 **Block Diagram ISD**

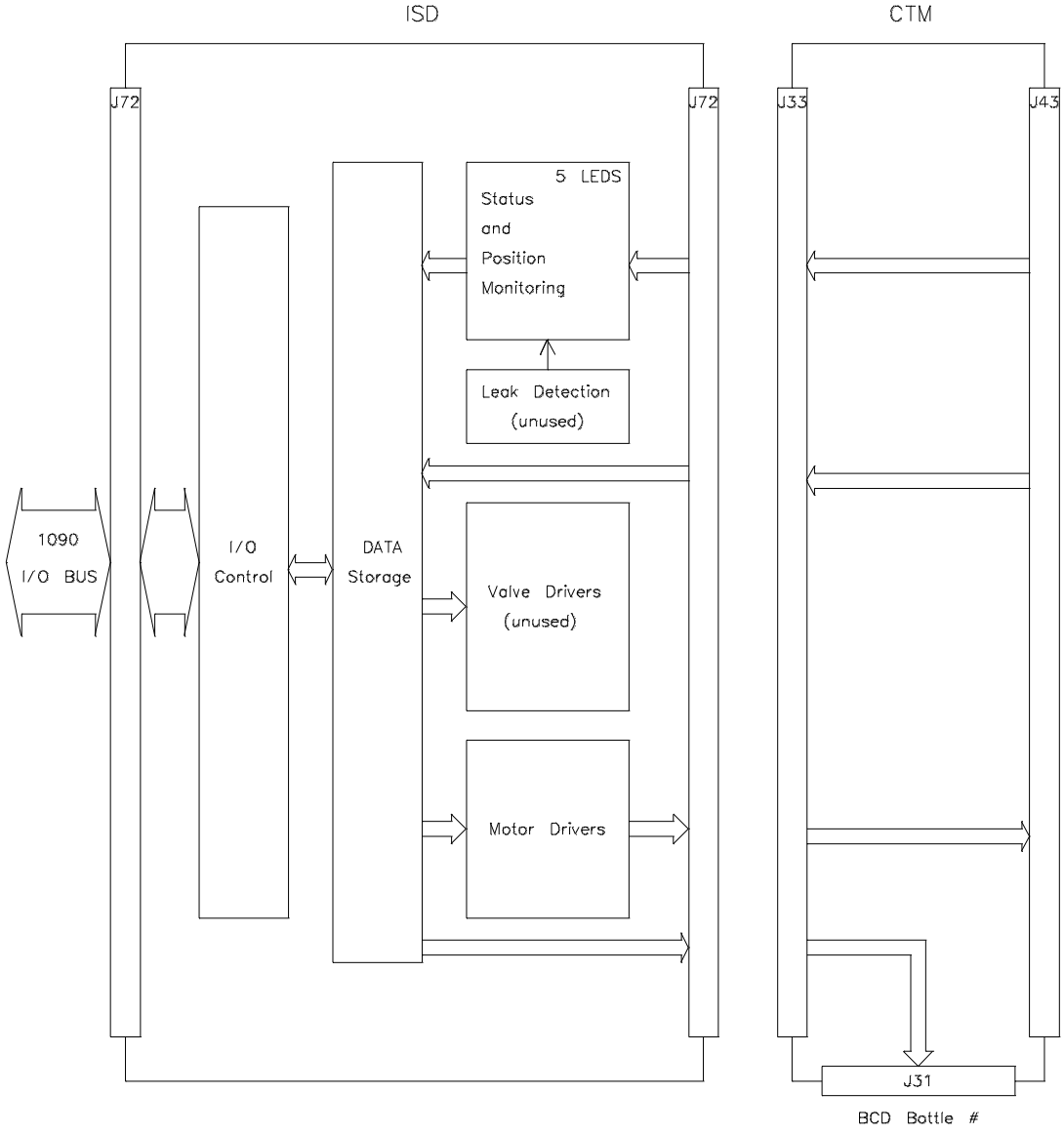

New Stepper Motors

All instruments with automatic sampler prefix *2614G* or *2623A* and automatic injector prefix *2617G* or *2639A and above* have new stepper motors installed. This new stepper motors have a higher torque than the old ones which improves the reliability of the auto-injector and sampler.

The following motors were affected:

Table 36 **Motor Part Numbers**

Description	Part Number
Metering Device Motor	79846-67901
Carriage Assembly Motor	79847-67901
Magazine Assembly Motor	79847-67902

The part numbers have not changed. Identification of the different types is quite simple. The old motors are from the vendor “MOLON”, the new motors are from the vendor “BERGER-LAHR” and have an additional label with the text:

ATTENTION!
use this motor only with ISD-Board 01090-66544

As seen from the table the new motors need the new ISD board. Reason is the ±12 V voltage supply instead of ±24 V for the MOLON type.

CAUTION

The new Berger-Lahr motors will destroy an old ISD board (01090-66531). Therefore, when replacing a motor (or when interchanging sampler/injector ISD boards during troubleshooting), ensure that only ISD 01090-66544 is used with the newer Berger-Lahr motors.

Table 37 **Compatibility Table**

Board version	MOLON (OLD)	BERGER LAHR (NEW)
old ISD board 01090-66531	YES	**NO**
new ISD board 01090-66534/-66544	YES	YES

Sampler Controller Board (SCO)

The SCO board is located on the base of the autos ampler. The electronics of the SCO are similar to the ICO. Refer to the auto injector section for information on operation of the basic light switch control circuit.

Two jumpers define the configuration of the sampler. Both options are presently not used.

The motor signals from the ISD are just transferred to the motors.

Figure 130 **Block Diagram SCD**

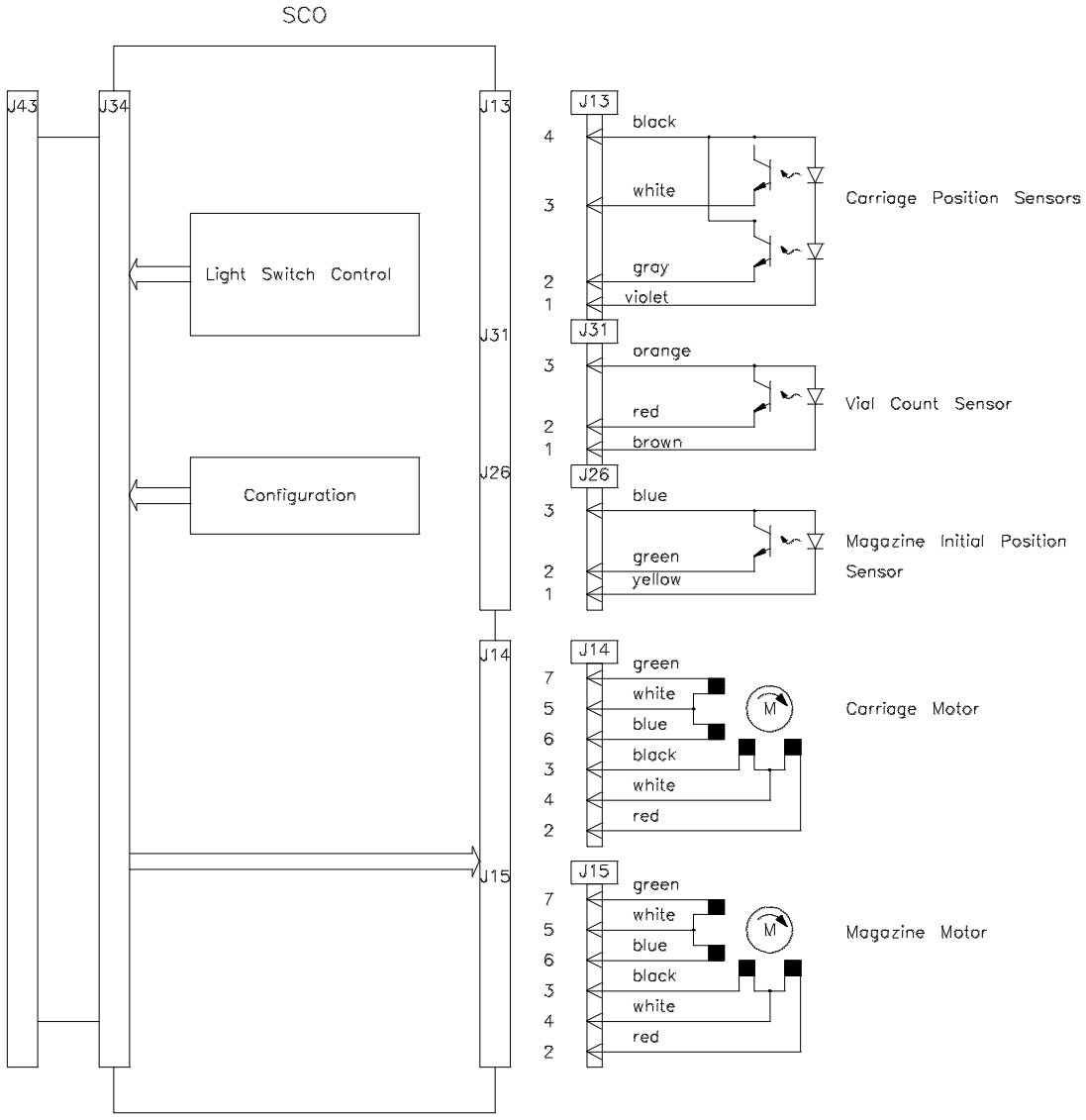

Figure 131 **Board Layout SCD**

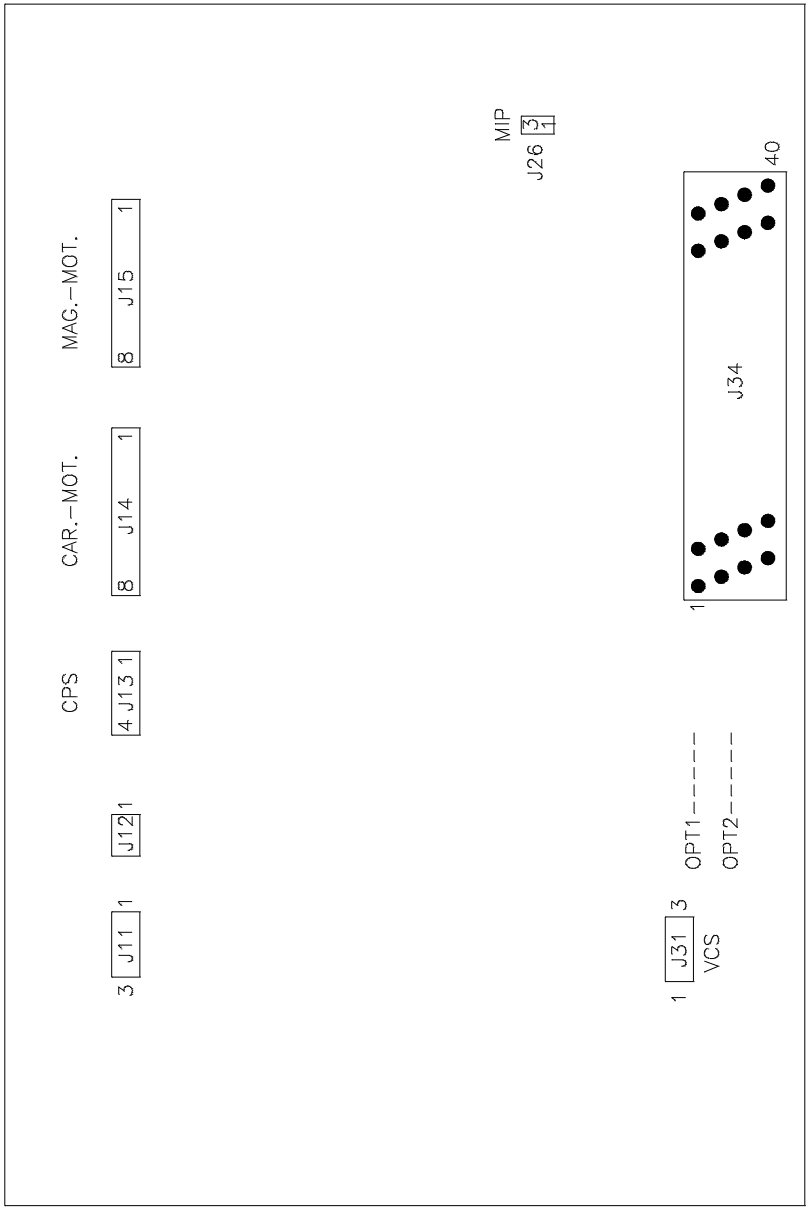

Procedures

NOTE For testing the autos ampler and adjustment of light sensors outside the 1090 mainframe, extender cable 01090-67610 is required.

Replacing Light Sensors

In older samplers it is necessary to remove the motor in order to have access to the light sensor. In newer samplers, the sensor can be replaced and adjusted without disturbing the motor.

NOTE The light sensors for the autos ampler and the TCAS have different part numbers (see “Automatic Sampler Parts” on page 400 and “Temperature-controlled Autosampler Parts” on page 403).

Replacing Motors

NOTE Before replacing motors, ensure the motor is compatible with the ISD board (see “ISD Board 01090-66534 (obsolete)” on page 233 and Table 37 on page 267).

In newer samplers the adjustment of the motor position is possible. In older samplers, the position is fixed: there is no adjustment possible.

After changing the magazine motor, ensure the tension on the belt is not excessive.

Diagnostics And Troubleshooting

In the diagnostics mode, each step of the sampler can be executed manually. For more detailed description of how to use the step command, refer to the auto injector section.

Table 38 lists the step commands for the injector and sampler.

Table 38 **Step Commands**

Ste=	Action
1	initialize syringe
2	valve to bypass
3	needle up
4	swivel arm in
5	needle into vial
6	suck up sample volume
7	needle out of vial
8	swivel arm out
9	needle down on seat
10	valve to main pass
11	syringe plunger to front position
12	activate light switches
21	magazine initialization
22	carriage to select vial position
23	magazine to select vial position
24	magazine to home position
25	carriage to home position

NOTE

The vial number specified is only transferred to the controller with the start of an analysis. Then it will be stored until the next injection is started. It can also be sent to the controller with the command: *VI=n*, where *n* is the vial number.

STE=12 will not turn-off ISD LED #5. For more information on STE=12 see the auto injector section, see "Using the Step Commands" on page 251.

The next table gives information on LED pattern during the execution of a step command.

Table 39 **LED Pattern during Step Execution**

STE=	Comment:
21	LED 4 flashing during movement, off in home position. LED 1 on briefly before reaching home position. If the magazine was in home position already, it moves briefly and turns LED 1 on. Next, the magazine moves into home position and turns off LED 1.
22	Carriage moves from actual position to home position and then into the selected position. LEDs 2 and 3 are flashing alternately. LED 3 will remain on after reaching the selected position except in carriage position 0.
23	LED 4 flashing during movement, off after reaching the selected position. LED 1 is turned on briefly after leaving home position.
24	see 21.
25	LEDs 2 and 3 flashing alternately during movement. Both are turned off after reaching home position.

Table 40 below gives the LED pattern after execution of a step command.

Table 40 **LED Pattern after Step Execution**

STE=	LED 1	2	3	4	5	Comment:
	0	0	0	0	1	Carriage in position 0
21						
	0	0	1	0	1	Carriage in all other valid positions
	0	0	0	0		Carriage in position 0
22						
	0	0	1	0	1	Carriage in all other valid positions
23	0	0	1	0	1	
24	0	0	1	0	1	
25	0	0	0	0	1	

0 LED OFF

1 LED ON

14

Column Compartment (CC)

Overview

The design of this temperature controlled column compartment uses a combined air-bath and column heating device. With a low volume heat exchanger (‘dead’ volume 2 µl), which is made of a short piece of capillary leading through a heating block (heat exchanger), the solvent entering the column compartment is heated up to a known temperature. The capillary heating block is designed such that it can function simultaneously as an air heater for the air thermostatted column compartment. The surface of the heating block is shaped such that recirculated air flowing across at a given velocity and surface temperature would be heated just enough to replace its heat loss through the oven walls. With this design it is assured that the air bath inside the compartment, as well as the column and the solvent flowing through it, are almost at the same temperature.

Actual temperature control is accomplished on the heating block. On its transfer from the heating block to the column inlet, the solvent cools down, ideally to the air-bath temperature, and calibration is required. This calibration measurement was determined during the development of the heated column compartment. The calibration is made by measuring the temperatures of the heating block and air bath at the same time over a range from 35°C to 120°C. The result of this measurement, documented in Figure 132 on page 277, shows two straight curves with the heating block temperature always being higher than the air-bath temperature. With this calibration in controller memory, actual temperature control is accomplished on the heating block, thus controlling the air-bath temperature as well.

For example, oven temperature setpoint is 60°C. The heating block temperature is controlled at 66°C.

NOTE

The temperature displayed on the user interface is always the derived air-bath temperature, even though the measurement is taken on the heating block.

Figure 132 **Air Bath/Heater Temperature Relationship**

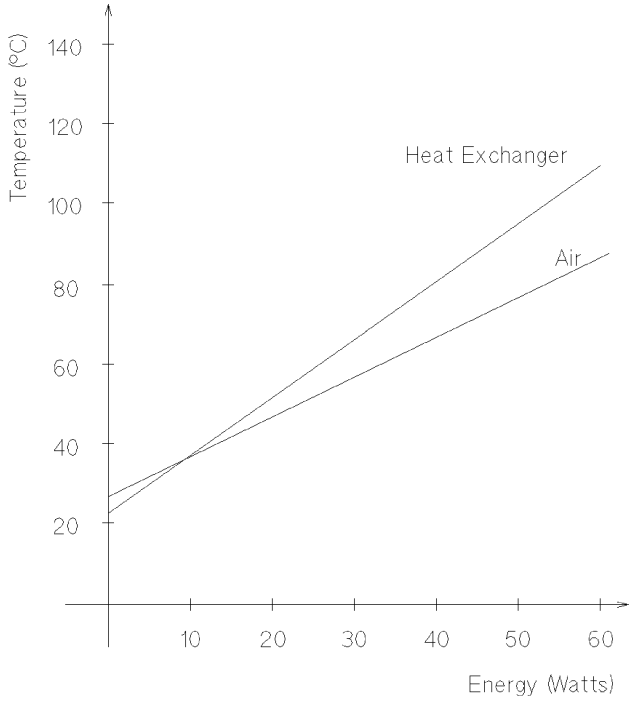

Also to be found from this diagram is the amount of energy that has to be brought to the heater in order to achieve a certain temperature. This is only of minor interest for operation and mentioned only for completely describing the diagram.

This type of heated column compartment brings one important consequence for column temperature equilibration. Before an equilibrium is reached the whole mass of column, column packing and solvent volume inside the column has to be brought to the selected temperature. This is depending on several factors: flow rate, setpoint temperature, ambient temperature and column dimensions.

Figure 133 on page 278 shows a setpoint temperature of 100°C. This means a temperature of 113°C for the heating block. Seventeen minutes after entering the setpoint the heating block has reached its temperature and the control activity starts.

The TEMPERATURE NOT READY signal will be cancelled 30 seconds after the sensed temperature was within a range of ±1.5°C of the setpoint. However this does not mean that the column is at the correct temperature. One can assume equilibration of the column in this example after approximately 35 minutes after turning the heater on. Stability of the high pressure reading is a good indication for equilibrium.

Figure 133 **Air Bath/Heater Temperature Relationship**

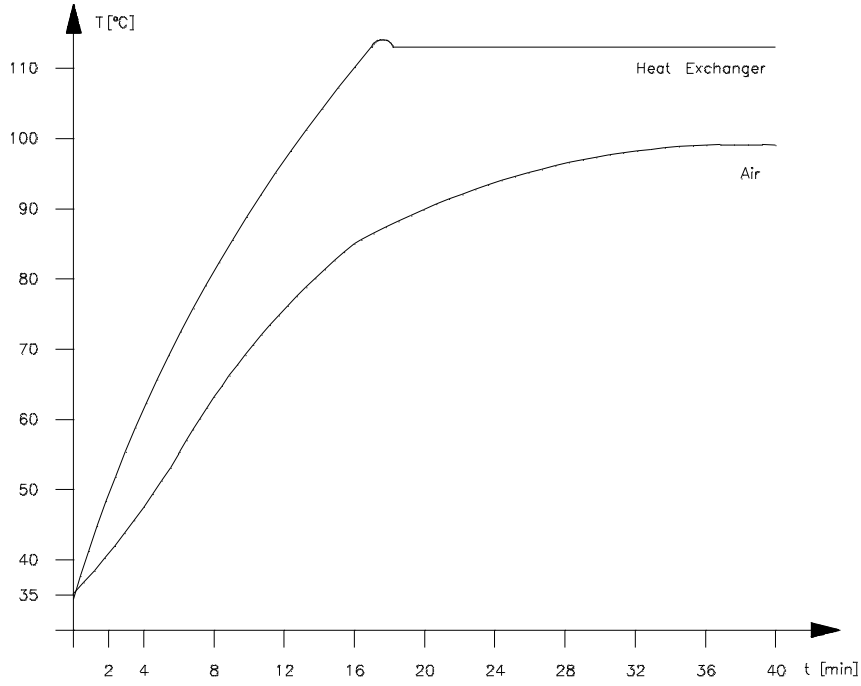

Column Compartment Mechanics

Temperature control is accomplished with a metal heating block which can be heated electrically. Homogeneous air-bath temperature distribution is achieved with a fan for air circulation inside the compartment. The heating block includes two capillaries:

One capillary leads from the injector rotary valve unit, through the oven heater block, to a zero dead volume (ZDV) fitting in the column compartment. The second capillary is not connected.

NOTE

Instruments with SN 2304G00101 to SN 2304G00140 have **one** capillary with internal diameter of 0.12 mm and **one** capillary with internal diameter 0.17 mm.

Instruments with SN 2304G00141 and greater have **two** capillaries with internal diameter of 0.12 mm.

Instruments shipped after August 1984 have **one** capillary with internal diameter of 0.12 mm and **one** capillary with internal diameter 0.17 mm.

Connections to the column have to be made with inlet and outlet adapters between column and ZDV fittings. Storage for columns is provided by a rack. Solvent resulting from leaks is collected in a tray and directed to the leak sensor in the solvent delivery system compartment.

Column Compartment Electronics

Heating of the column compartment requires operation of fan and heater. As soon as a setpoint temperature between 1°C and 100°C is entered, the fan turns on. Line power is supplied to the heater by switching a triac with pulses. Depending upon actual and setpoint temperature, pulses or pulse groups are available. Pulses are generated on the power supply control board (PSC) at a rate depending upon line voltage and frequency. Table 41 shows the rates per second which can be obtained.

Table 41 **Heater Pulse Rate**

	100/120 VAC	220/240 VAC
50 Hz	00	25
60 Hz	120	30

During heat-up (actual < setpoint) pulses will be permanently available. The more actual temperature approaches setpoint temperature, the less energy has to be brought to the heater. Energy is now provided in portions of 150 Ws. When setpoint temperature is reached only the amount of heat necessary to maintain setpoint temperature is provided.

Table 42 **Heater Specifications**

Oven Temperature Sensor	Resistance at ambient approx. 109 ohms. When open, actual oven temperature reads 80-90°C. When short, approx. —11°C and message EO 01 occurs.
Oven Heater	Resistance at ambient approx. 75 ohms.
Heater Over temperature Switch	Opens at 140°C ±5°C.

Interconnections

Figure 134 gives boards, connectors and pin connections where the control signals run. FON and CVO are generated on the MCO board and sent to the OVI. The HON signal is synchronized with the ZCP HEATER signal on the MCO. Feedback signals are FOC (fan ON, Rev. A only!) and TESE1 and TESE2 which provide the analog temperature signal. The OVO signal is a configuration signal and is pulled low with the heated column compartment installed.

Figure 134 **Interconnection Diagram**

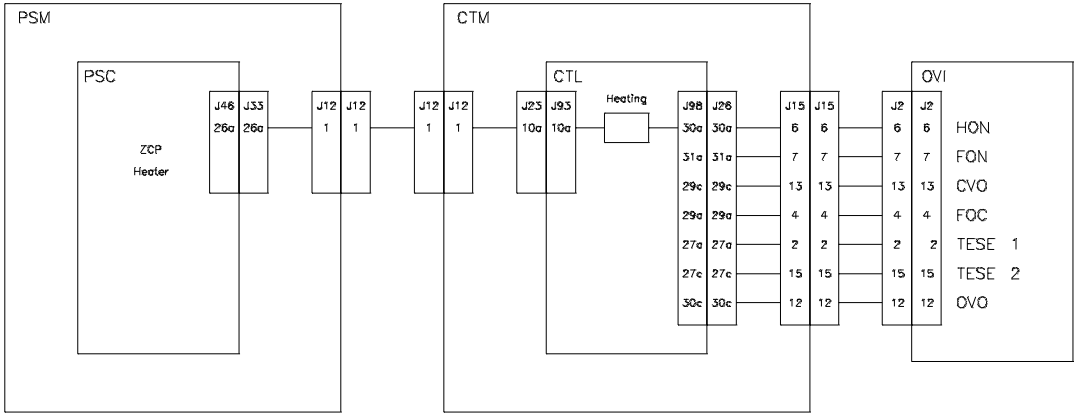

Oven Interface Board (OVI)

Electrical control of the heated column compartment is from the mainframe controller board (CTL/MCO) via the oven interface board (OVI), which is physically located at the left behind the column compartment housing.

Revision A

Line power is supplied to the OVI via a three wire cable from the primary board (PRI). Note that line power is available at the OVI as long as the line power switch is on. Line power is connected to the oven fan assembly. The fan in use is a 115 VAC type and has to be matched to line voltage with switch S1 on the OVI. In addition line power is required for the oven heater assembly 01090-61105. Note that the heater is a 115 VAC type and it requires adequate setting of jumper J65 on the power supply control board (PSC). For details refer to section “Power Supply” on page 91.

With a setpoint temperature between 1°C and 100°C entered, the FON signal goes low, K1 closes its contact and supplies line power to the fan.

It is presumed that the fan over temperature switch is closed (no over temperature exists) and the voltage configuration switch is set to the correct position. The feedback signal FOC goes high, signaling proper execution of the FON signal. Power is gated to the heater by pulses HON. Actual temperature is sensed on the heat exchanger (TESE1 and TESE2). When the OVI is installed the OVO line is pulled low, indicating to the controller that the heated column compartment option is installed.

Figure 135 **Block Diagram OVI Revision A**

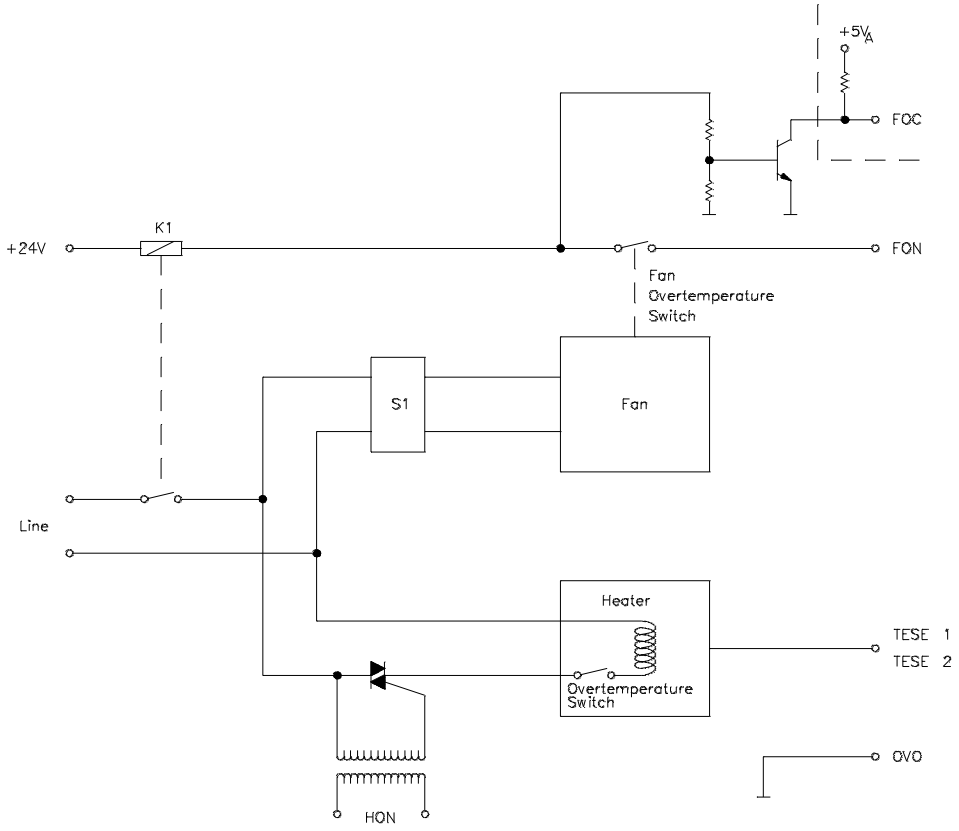

Revision B, C, D

The difference to Revision A is that the fan is no longer equipped with an over-temperature switch and that the feedback circuit (FOC) of the FON signal is not present. This signal is not used in the controller in either case.

Figure 136 **Block Diagram OVI Revision B, C, D**

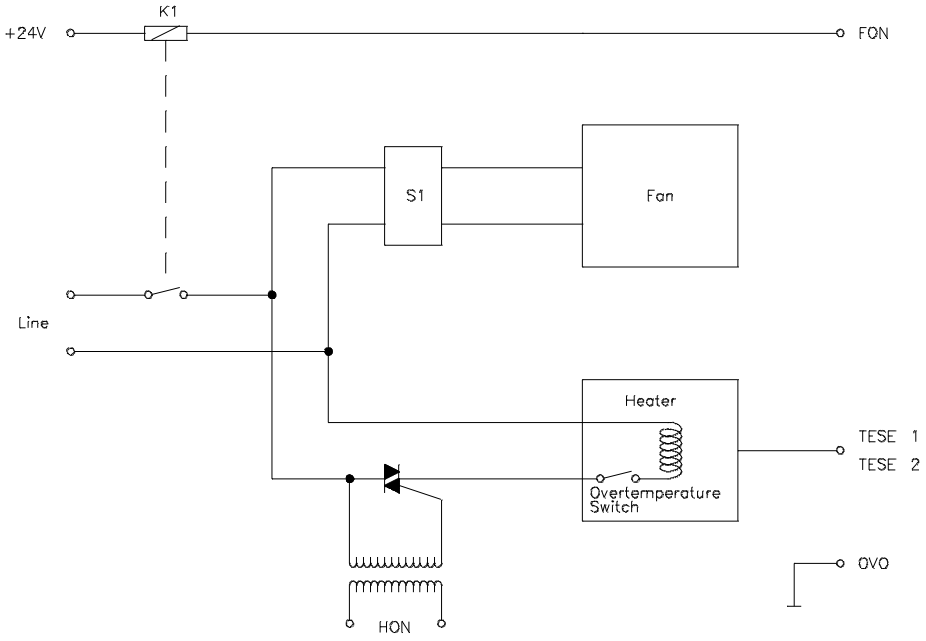

Signal States

Table 43 shows the states of signals depending on setpoint and actual temperature.

Table 43 **Signal States**

Condition	FON	HON	FOC *
T=0	HIGH (+24V)	HIGH (+5V)	LOW (0V)
T > 0; T < AMB	LOW (0V)	HIGH (+5V)	HIGH (+5V)
T > AMB; T < SET	LOW (0V)	PULSES	HIGH (+5V)
T > AMB; T = SET	LOW (0V)	PULSE GROUPS	HIGH (+5V)
T > AMB; T > SET	LOW (0V)	HIGH (+5V)	HIGH (+5V)

* Only measured on Revision A boards.

Figure 137 Diagram OVI Revision A

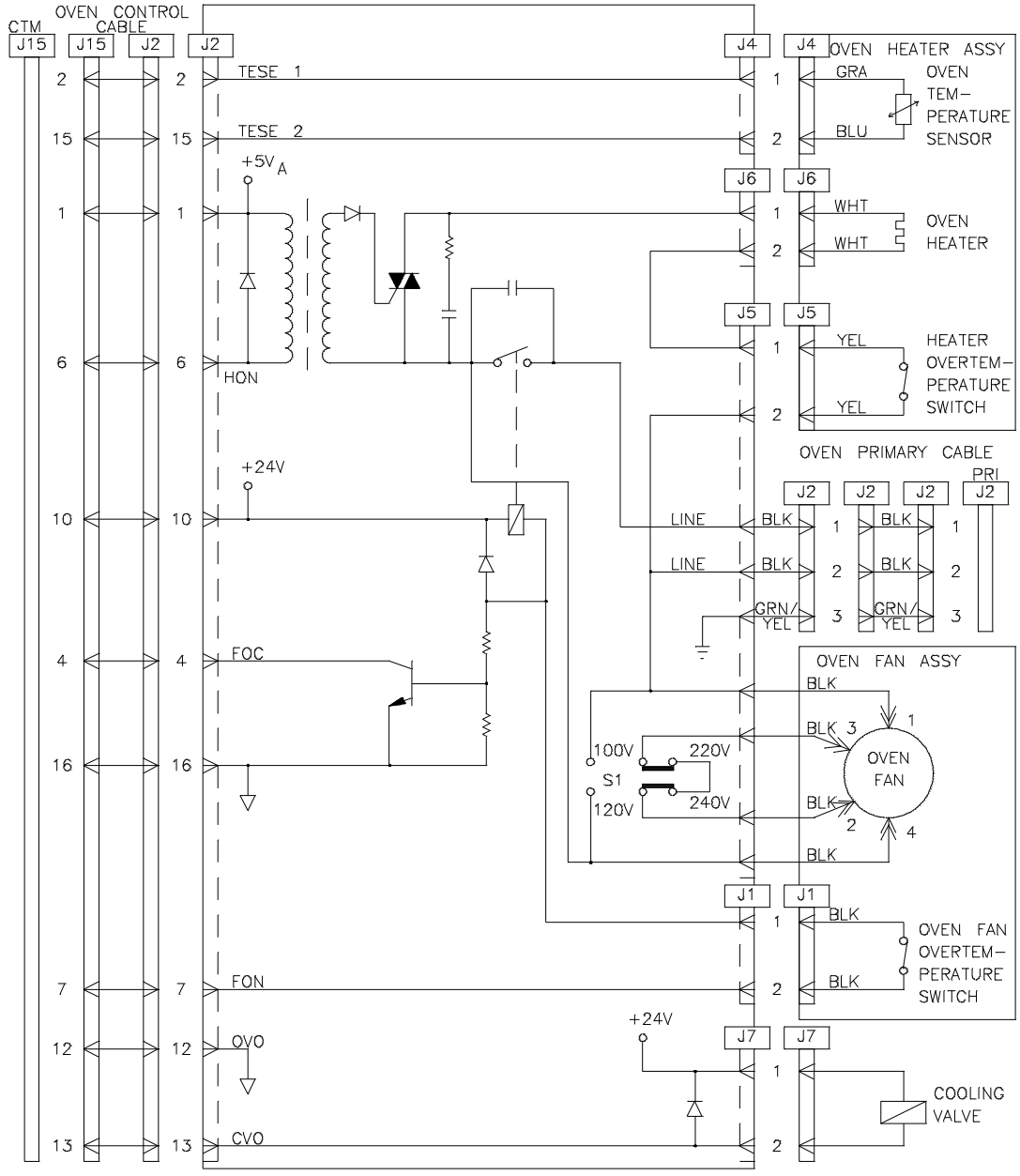

Figure 138 **Board Layout OVI Revision A**

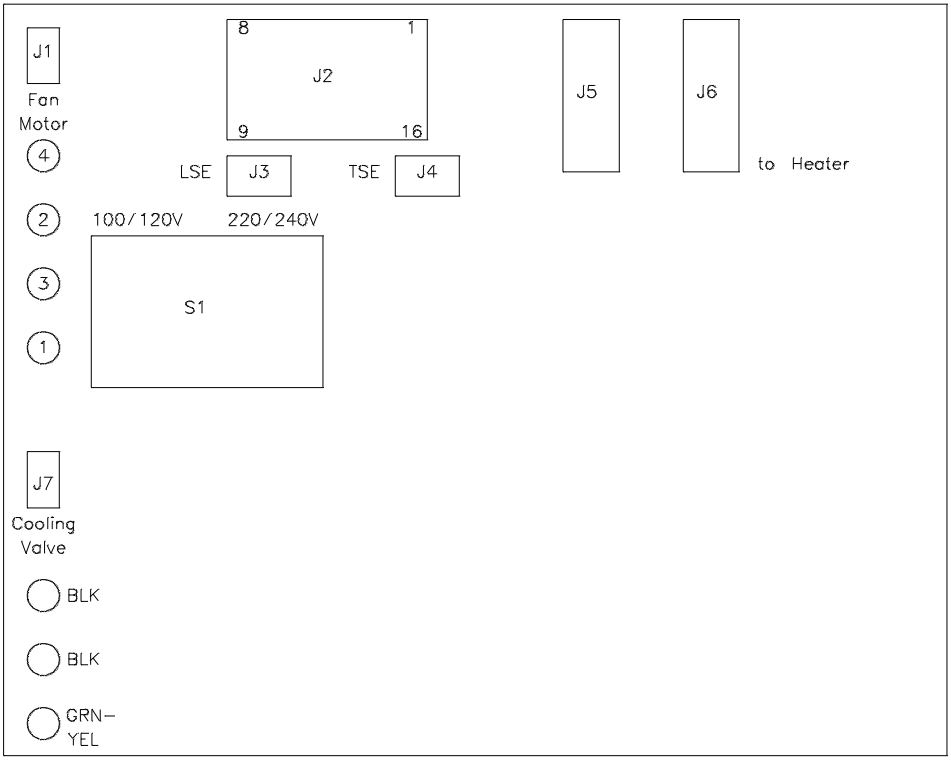

Figure 139 Diagram OVI Revision B, C, D

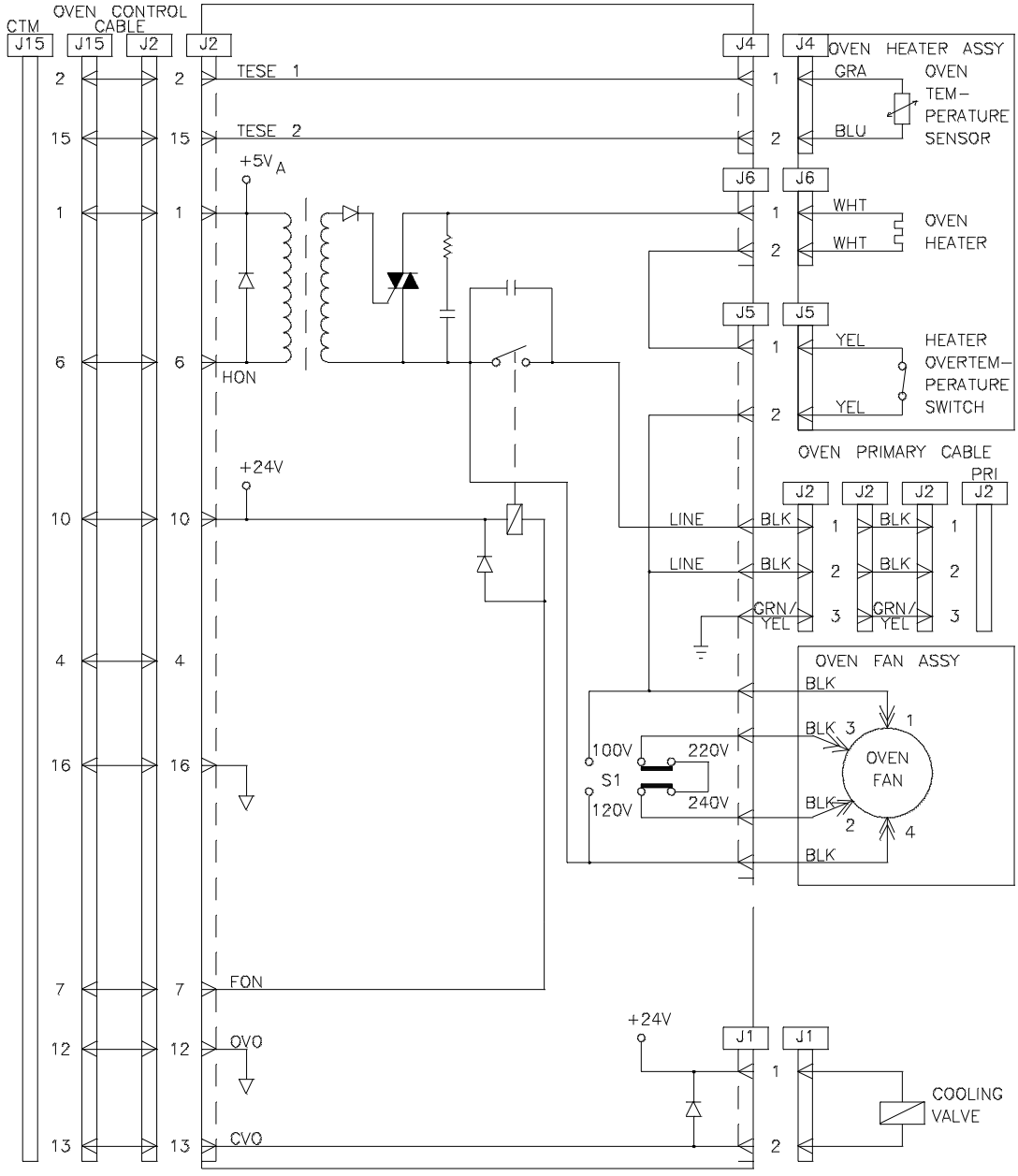

Figure 140 **Board Layout OVI Revision B, C D**

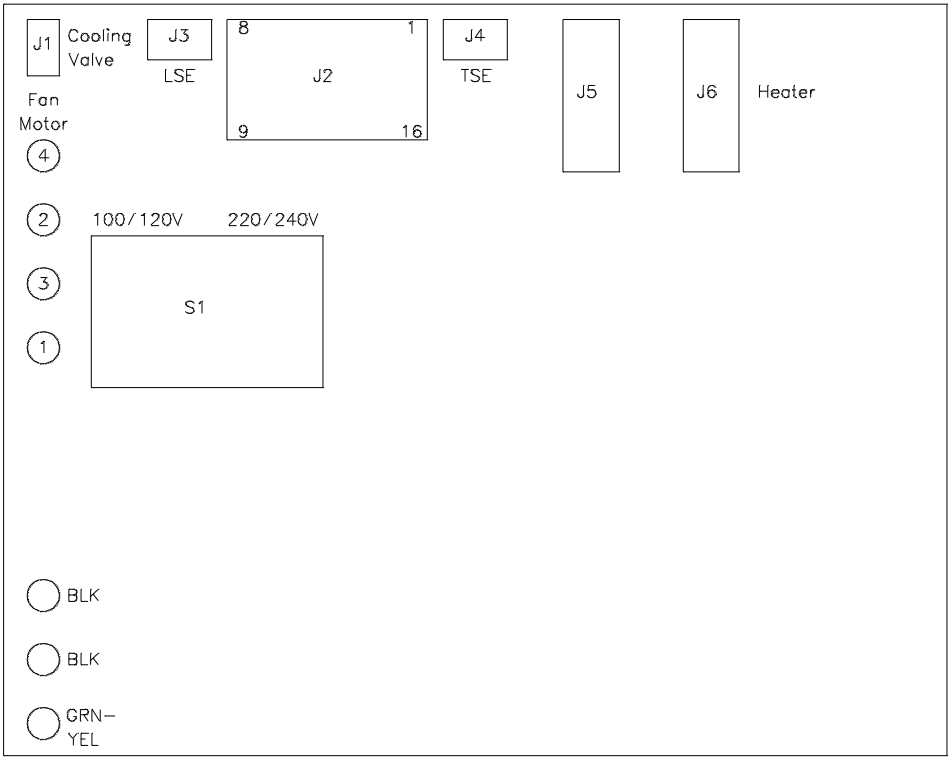

NOTE Revision D is uses a different type of triac.

Compatibility

The fan assembly previously contained a thermal switch located in the motor. The wires from this switch were connected to J1 of the revision A OVI board. Current fan assemblies do not contain this switch.

When replacing a fan assembly or OVI board, observe Table 44:

Table 44 **OVI/Fan Compatibility**

Fan Assembly	OVI Rev. A	OVI Rev. B, C, D
Old	OK	Do not connect wires from fan thermal switch.
New (3160-0402)	Short pins 1 and 2 of J1 on OVI.	OK

Procedures

Replacing the Heater Assembly

WARNING **High voltage on the OVI. Turn the line power switch off and disconnect the power cable before working on the oven.**

1. Remove four metal screws and two screws at the top to loosen the metal grill. Remove grill.
2. Remove heater from column compartment sliding towards the front. Push cables and capillaries through the respective holes at the rear of the column compartment.

Replacing the Oven Fan Assembly

WARNING **High voltage on the OVI. Turn the line power switch off and disconnect the power cable before working on the oven.**

1. For this repair the complete column compartment has to be removed from the instrument.
2. Disconnect all capillaries and cables from or to the column compartment.
3. Loosen screws of bottle holder A and swing holder to the rear.
4. Loosen screw that holds the column compartment to the mainframe.
5. Open pump inspection door and remove all boards for the solvent delivery system (SDS). Use antistatic field workstation or similar equipment.
6. Disconnect inlet and outlet capillary from high pressure pump (HPP). Remove three screws that hold the HPP to the SDS compartment panel, slide HPP inwards and set on high pressure damper.
7. Remove front screw that holds the column compartment from inside the SDS compartment.
8. Disconnect drain tubing from column compartment.
9. Slide column compartment to the left, then lift it up and set it on bench for further dismantling.

10 Disconnect all cables from fan and heater changer to OVI.

11 Remove all screws that fix the oven cover panel to the oven frame. Remove cover panel.

12 Remove insulation from oven frame.

13 Loosen three screws that hold the fan assembly to the oven frame. Remove fan.

14 Insert new fan into oven frame and fix with three screws. Do not forget to use the fan insulation from previous fan.

15 Install insulation to oven frame. Slide capillaries and cables through respective slits and holes of insulation.

16 Install cover panel and fix with all screws to oven frame.

17 Connect fan and heat exchanger cable to OVI. Also connect power cable and oven control cable.

15

Filter Photometric Detector (FPD)

Overview

The filter-photometric detector (FPD) is a single wavelength detector. Up to seven different wavelengths can be programmed during a chromatographic run. Wavelength change requires approximately two seconds. The output signal is set to the previous level thus achieving an undistorted chromatogram.

The FPD is equipped with a built-in processor system that controls internal data manipulation, deuterium lamp power supply (DPS) and stepper motor.

Two analog output signals are provided: a high resolution signal for integrators and a low resolution signal for recorders, both monitoring measured light absorption in absorbance units. Connection to the HP 1090 mainframe is via an interface on the filter detector processor board (FDP) that allows transfer of control and status information.

Power for boards is supplied from the HP 1090 power supply (PWS#2).

Optical System

Figure 141 **FPD Optical System**

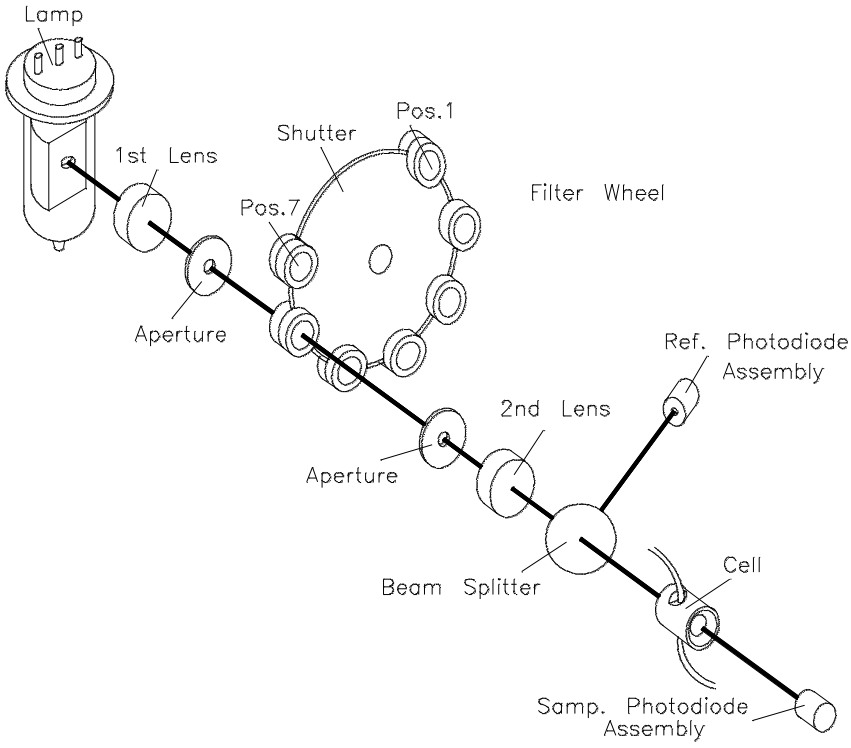

Deuterium Lamp

NOTE Only D_2 lamp 79880-60002 can be used with the FPD. When using the D_2 lamp 79880-60003 (DAD), then a burn-in time of several hours may be required to reduce the initial lamp energy (especially with new optical).

The deuterium lamp provides a continuous spectrum of light from 190 to 600 nm. For applications which need greater detectability there is a high lamp current position available. Average lamp lifetime is 700 hours in the low

lamp current position. The lamp can be switched off automatically after a sequence.

First Lens System

The light is collected by a plan convex lens and transmitted through an aperture which minimizes straylight.

Filter Wheel

The filter wheel is turned by a stepper motor to one of eight positions. The wheel can hold up to seven interference filters. The eight position is the shutter, which completely blocks the light beam during dark current measurement.

The filters themselves are normally available in the following wavelengths: 210; 230; 254; 280; 340; 430 and 540 nm. Special filters can be ordered by the user, keeping in mind that the detector operates in the range of 190 to 600 nm. Any filter can be placed in any filter wheel position.

The filters typically have a bandwidth of 10 nm; 5 nm on either side of a center wavelength. UV filters have an overall transmittance of about 25% (with respect to light input) and VIS filters have an overall transmittance of about 50%. Bandwidth is determined at the 50% transmittance point of an individual filter:

Figure 142 **Transmittance of Filter**

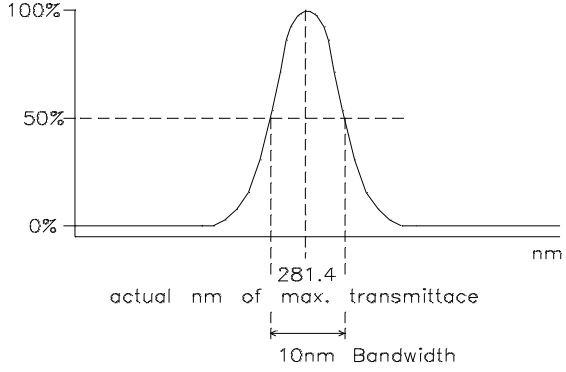

Second Lens System And Beam splitter

The “monochromatic” light passes through a second aperture and is then focused such that any chosen wavelength is in focus with the flow cell. A beam splitter provides sample and reference signals.

Flow Cell

Low volume columns generate low volume peaks. The flow cell has to preserve the separation efficiency by having a low volume itself. At the same time the path length needs to be as long as possible because it is proportional to the detectability. The flow cell in the filter photometric detector has an optimized combination of 4.5 µl volume with 6 mm path length.

Operation

Stable light emission of the deuterium lamp is provided by controlling the anode lamp current after ignition. Control signals for the power supply board are obtained from the filter detector processor board (FDP). Operating voltages are taken from the HP 1090 main power supply.

Light falling onto the photodiodes of sample and reference respectively is converted into a 16 bit digital signal. Dark current, which was measured prior to a chromatographic run, is used for signal correction. After being filtered, the digital signal is logarithmic and a signal is achieved that represents absorbance. The balance assures undistorted output signals in case of filter switching during run. Autobalance (absorbance) as well as auto-zero (%zero) is implemented. A low resolution output analog signal is produced with the 10 bit D/A converter for recorders. An 18 bit word is fed to the D/A converter for an integrator signal.

For diagnostic purposes, the signals from each channel can be bypassed to the logarithmic, absorbance and balance stage, then representing light intensity of sample and reference photo diode respectively.

Control bits are provided for the stepper motor driver of the filter wheel. The leak detection circuit provides a status signal to the processor. Interfacing with the HP 1090 controller is accomplished with an interface matching the detector I/O bus with the HP 1090 I/O bus. Only status and control information is transferred.

Turn-on and Calibration

The complete turn-on of the FPD involves a somewhat lengthy process. First, the deuterium lamp goes through its own ignition sequence (see “Lamp Ignition” on page 317). The filter detector processor at first assumes the lamp has ignited and begins the detector turn-on sequence. The filter detector processor begins turning the filter wheel while monitoring the output of the reference photo diode. The lowest reference photo diode output over the turning period is considered to be the shutter position of the filter wheel. The filter wheel is moved to the shutter position and a dark current measurement is taken. From the shutter position, the other seven positions are checked and verified. Finally, the filter wheel is moved to the position currently in memory (default = pos#3) and an autobalance is done.

The detector not ready LED, which is on during the turn-on sequence, is turned-off indicating the detector is ready for operation.

Since the FPD does not make use of the *CURRENT MEASUREMENT* circuit on the DPS board, lamp ignition is verified by the detector in a roundabout way. While searching for the shutter position of the filter wheel, if the output of the reference photo diode remains constant the filter detector processor realizes an error exists. Most likely the lamp has failed to ignite. The entire detector turn-on sequence, up to that point, is repeated. After three attempts to verify lamp ignition have failed, error condition ED13 is set and the filter detector processor releases all control lines to the DPS board.

The detector is automatically calibrated before each injection, or manually by a lamp-on command while the lamp is already on.

NOTE

When the HP 1090 is put into run mode by the remote input on the CTM board (e.g. when the manual injection valve is installed), the calibration is not done automatically. In this case, the detector should be calibrated manually before each injection.

During calibration, the filter wheel is moved to the shutter position and a dark current measurement is taken. The filter wheel is then returned to the current position and an auto balance is done. After calibration, the detector output is again at baseline coordination; either 0 V or 50 mV depending on the position of the offset switch on the ADA board.

Figure 143 **Block Diagram of Operation**

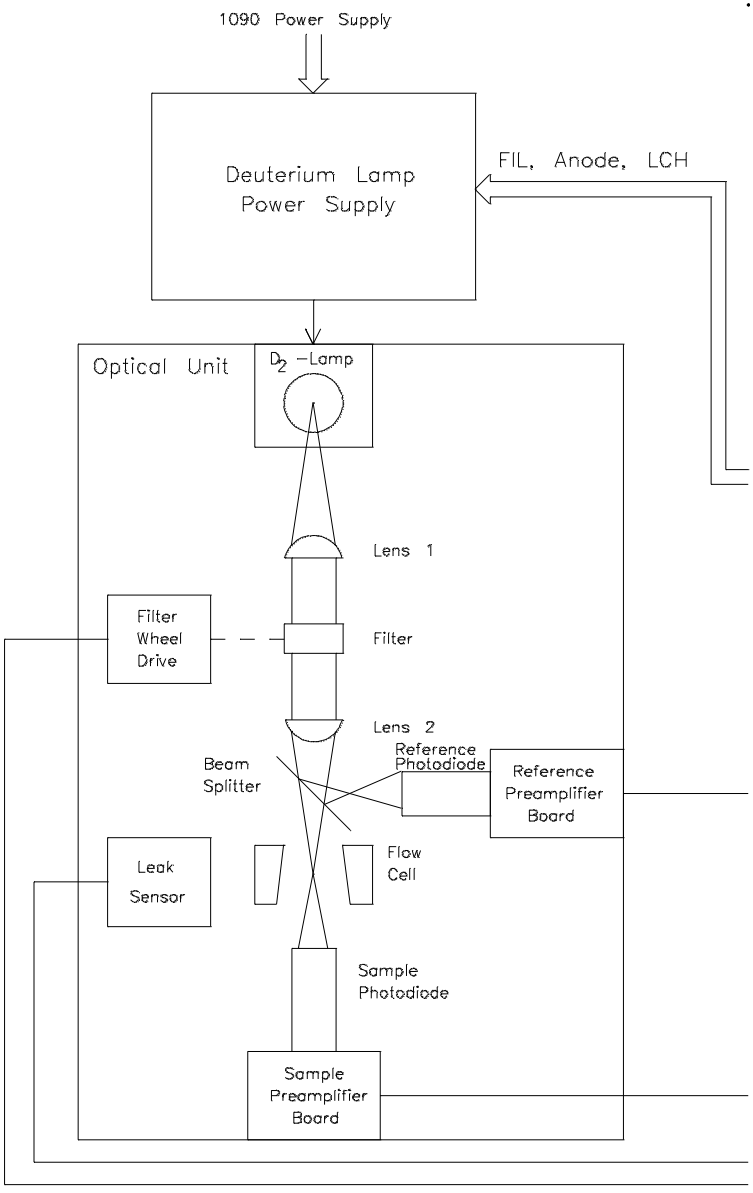

Figure 144 **Block Diagram of Operation**

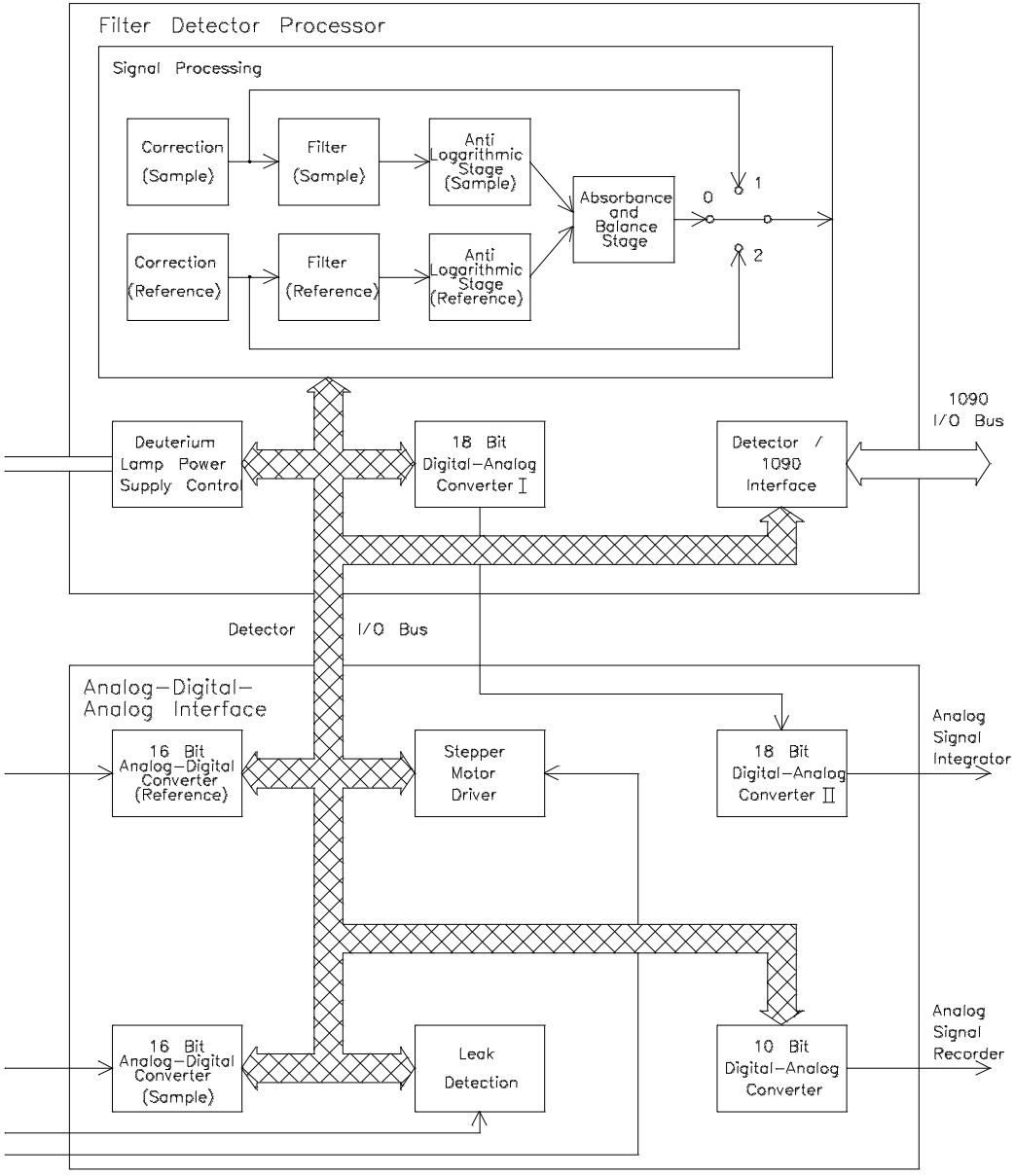

FPD Mechanics

The filter photometric detector module is installed on the right hand top of the HP 1090 mainframe. It is fixed with two screws to the mainframe at the front and one screw at the rear. A tab on the detector slides into a slot on the HP 1090 mainframe. The metal frame holds all electrical printed circuit boards and the optical unit. Electrical connection is made to the HP 1090 controller board (CTL or MCO) via the controller mother board with a flat ribbon cable from the filter detector processor board (FPD). Connection to the HP 1090 power supply is made with two cables in the rear part of the module.

Optical Unit

The optical unit contains all optical items as well as some electrical assemblies. The light source, the deuterium lamp, is located in a separate compartment attached to the casting to allow for good heat dissipation. The wall separating lamp compartment and filter wheel compartment holds the first lens assembly. A wheel providing positions to install up to seven filters is built into the filter wheel compartment. Movement is obtained from a stepper motor. The second lens and the beam splitter are one complete assembly that is installed in the wall between filter wheel compartment and cell compartment. The photodiodes for sample and reference are mounted respectively in a metal cylinder which is screwed onto a printed circuit board.

These two assemblies protrude out of the walls of the cell compartment. The cell uses the sample diode assembly and the beam split assembly for mechanical support. Solvent resulting from leaks in the cell are sensed with an electrical sensor. One cover goes over the whole casting.

The cell compartment cover has to be closed for proper operation (not for newer detectors).

Light intensity signals as well as status and control signals for the stepper motor are connected to the analog digital interface board with flat ribbon cables.

Deuterium Lamp

NOTE Only D_2 lamp 79880-60002 can be used with the FPD. When using the D_2 lamp 79880-60003 (DAD), then a burn-in time of several hours may be required to reduce the initial lamp energy (especially with new optical).

The radiation source, is a deuterium gas discharge lamp. Deuterium is a hydrogen isotope, which has, compared to hydrogen, one additional neutron. A continuous spectrum of light is generated in a wavelength range from approximately 190 nm to 600 nm, shown in Figure 145. The maximum emitted energy is at a wavelength around 240 nm.

Figure 145 **Spectrum of Deuterium Lamp**

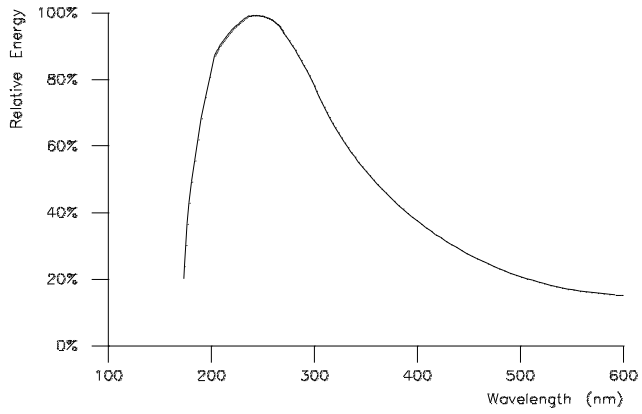

Lamp Lifetime

There are two ways to define lifetime:

1 The theoretical definition states, that a loss of 50% of the initial energy at the wavelength of maximum emission means the end of the lifetime. This usually results in increasing noise. Measurements, taken from 10 lamps, are averaged and shown in Figure 146 on page 303. The reduction of energy emission is wavelength dependent and it is significantly higher for wavelengths in the ultra violet range compared to visible light. Thus, presuming that the energy maximum was at 250 nm, a lifetime of 700 hours can be found from this diagram.

2 The second definition says, that the lamp can be used until it does not ignite any more. However, as the lamp ages, the increasing noise may begin to interfere with integration.

Figure 146 **Lifetime of Deuterium Lamp**

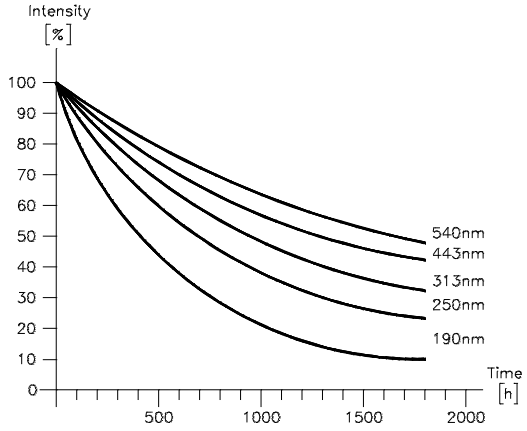

Lens System and Beam Splitter

NOTE These parts are not field replaceable, nor may the position of the assembly be disturbed in the field.

The light, emitted from the deuterium lamp has to be focused into the flow cell. This is done by means of a lens system, which is physically separated into two assemblies. The lens next to the lamp (Lens 1) contains the first plan convex lens, the one next to the flow cell (Lens 2) contains the second lens and the beam splitter. Both lenses are assembled in the same way. The lens is held in place with a cushion, which in turn is pressed towards the lens with a curved washer located between retainer and cushion. An aperture, pressed into the body, completes the assembly.

The beam splitter divides the light beam into sample- and reference beam with a ratio of 2 : 1. Mechanically the beam splitter is integrated into the assembly next to the flow cell. Splitting is accomplished by small aluminum particles inside the suprasil disc which act as small mirrors. By using this design the split ratio is independent of wavelength.

Figure 147 **Lens System**

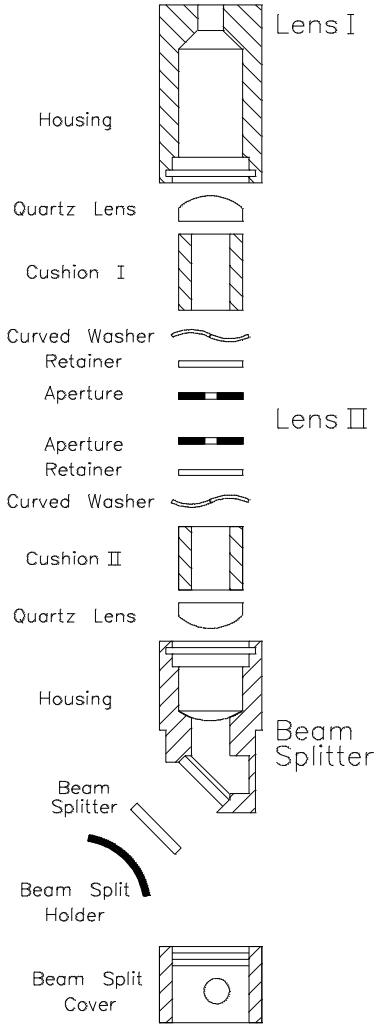

Flow Cell

The flow cell is comprised of several parts. The stainless steel body homes a screw, a spring, a window and a gasket on each side. The gasket at the side where the light leaves the cell has a larger internal diameter due to the conical shape of the cell interior. The screws have to be turned until the mechanical stop is reached. The spring is responsible for pressure tightness. At the same time it keeps the window inside the screw to ease assembling. The solvent is connected with a 0.12 mm internal diameter capillary, whereas the outlet capillary has an internal diameter of 0.25 mm.

Figure 148 **Flow Cell**

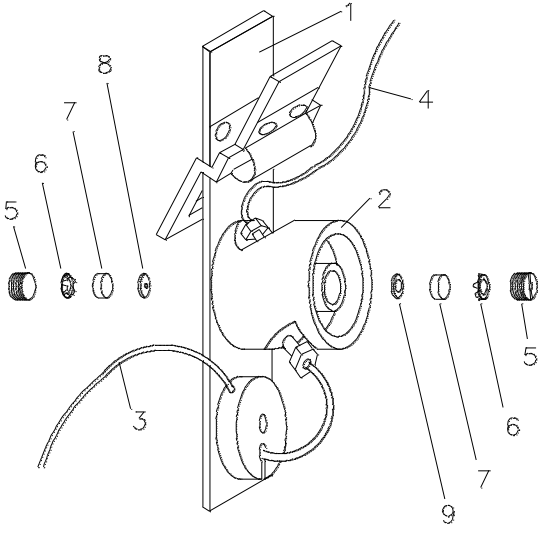

Electronics

Diode Assemblies

- Sample Diode Assembly 79881-60006
- Reference Diode Assembly 79881-60007

NOTE You can order the diodes on assembly level ONLY!

The photodiodes is installed in a metal body. This part is screwed onto the SPA board assembly. No adjustment is required. The photo diodes is always at the correct location.

Light falling onto the photo diodes generates a photo current depending on light intensity. This current is converted on the sample preamplifier board (SPA) into a voltage by operational amplifier. The signal passes a low pass filter with a limit frequency of 40 Hz. This signal is transferred to the ADA for further processing. A PTC resistor, working as a leak sensor, is connected to the SPA. Interconnection to the leak detection circuit on the ADA uses the same cable as the photo diode signal.

Operation and mechanical assembly of the RPA board assembly is exactly in the same way as described for the SPA. Instead of connecting a PTC, the stepper motor of the filter wheel drive is connected to the RPA.

Figure 149 **Block Diagram SPA/RPA**

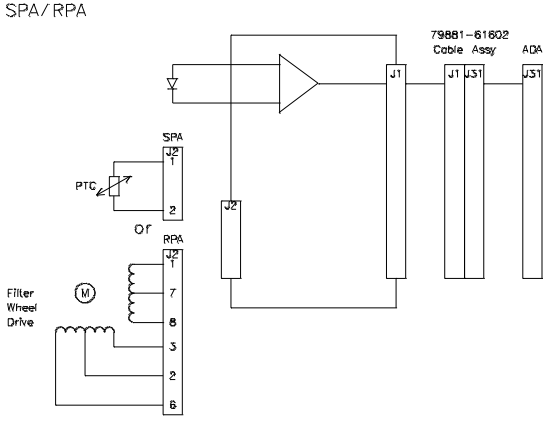

FPD Processor Board (FDP)

- 79881-66503 (current)

Filter detector control is based on the Z80A processor on FDP board. A bus system (detector I/O bus), that is connecting functional blocks on the FDP board and the analog digital analog interface board (ADA) is provided from the Z80A. The detector I/O bus requires an unidirectional driver and a bidirectional driver to be matched to the Z80A. Interrupt bits from the ADA and the HP 1090 controller have to be set to the interrupt logic circuit, from where links are made to control and data bus. Data available on the detector I/O bus are then related either to the ADA or they will be used by the detector/HP 1090 interface. A master clock from the ADA is applied to the clock circuit where further clocks are derived. The POP generator circuit provides a reset signal for proper starting all circuits. Correct access to RAM and ROM is managed by the memory address decoder. There is 2 KByte of RAM and 8 KByte of ROM (EPROM) memory space available.

The output buffer provides signals for the deuterium lamp power supply (DPS) and two LEDs. The 18 bit digital to analog converter is split on two boards. On the FDP a pulse width modulated signal (PWM) is generated which is then connected to the ADA where the second part of the conversion takes place.

In total four LEDs are located on the FDP. They have the following meaning. The green LED indicates DETECTOR READY. The yellow LED indicates an idle situation: the lower the blinking frequency is the busier the processor is. The same is true for the two red LEDs. The one next to the green LED indicates ADA interrupts, the one next to the yellow LED indicates HP 1090 interrupts. In case that the ADA interrupt LED is on, the processor is locked up. It can be restarted pressing the reset button on the FDP.

Figure 150 Block Diagram FDP

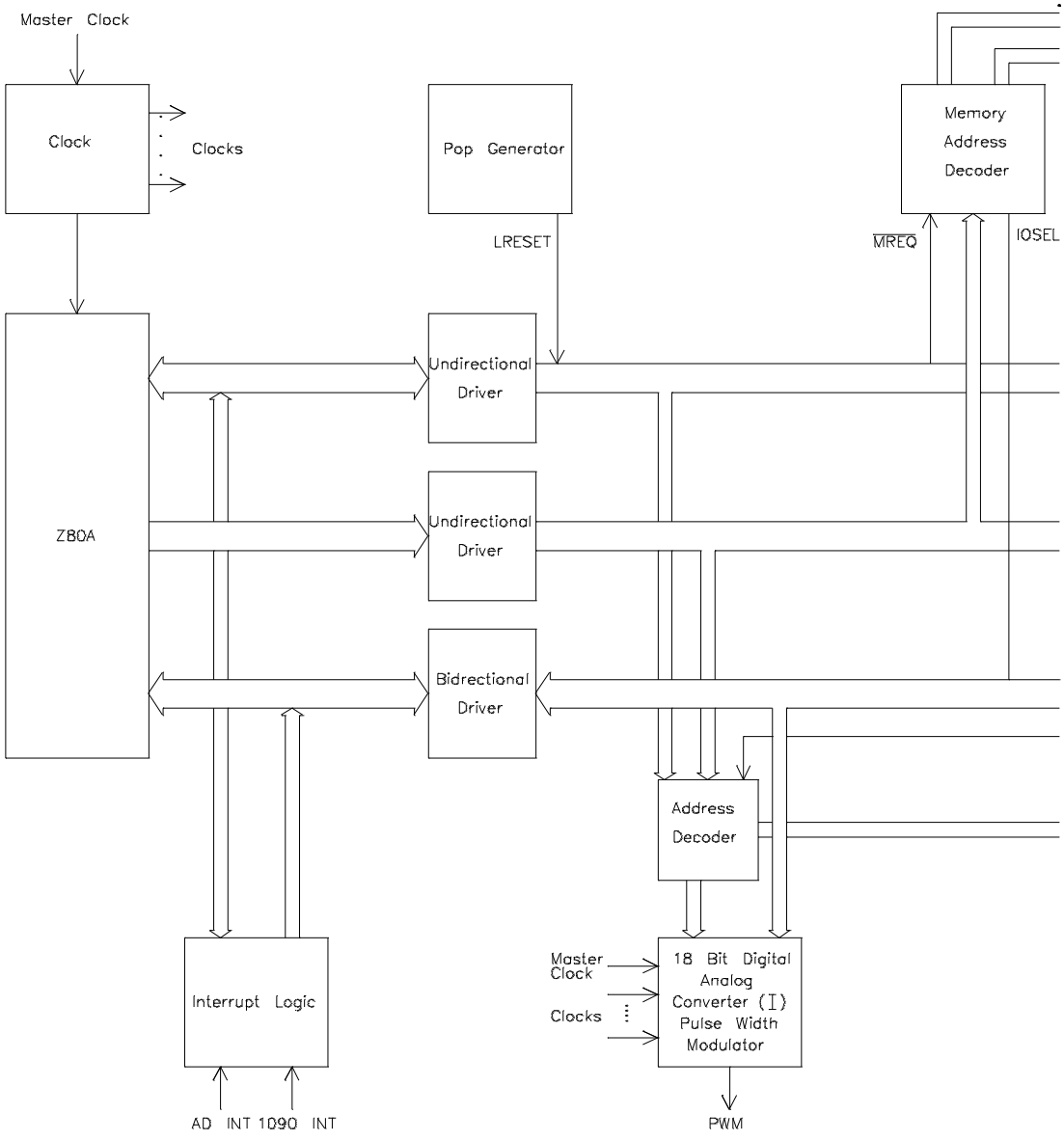

Figure 151 Block Diagram FDP

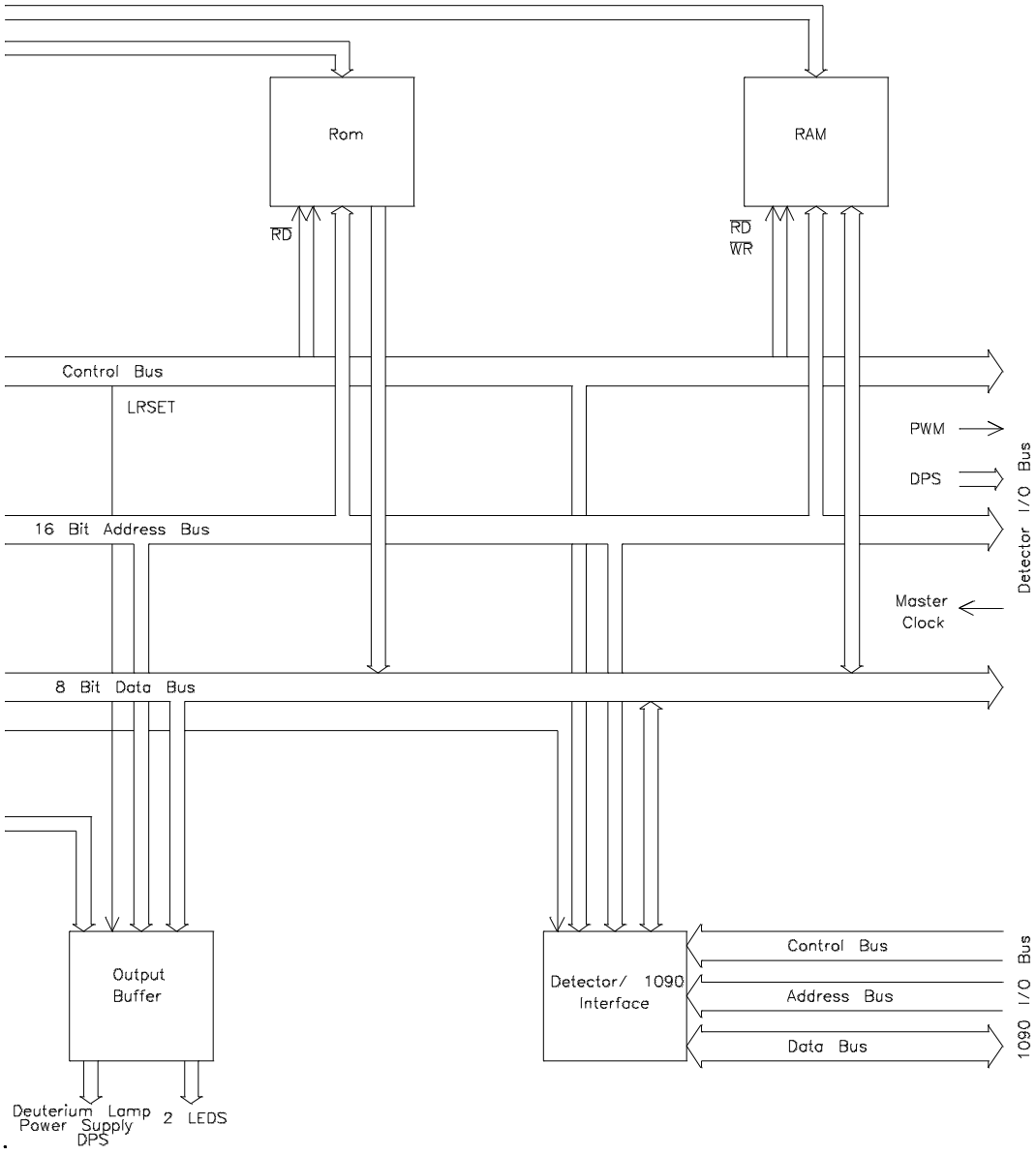

Figure 152 **Board Layout FDP**

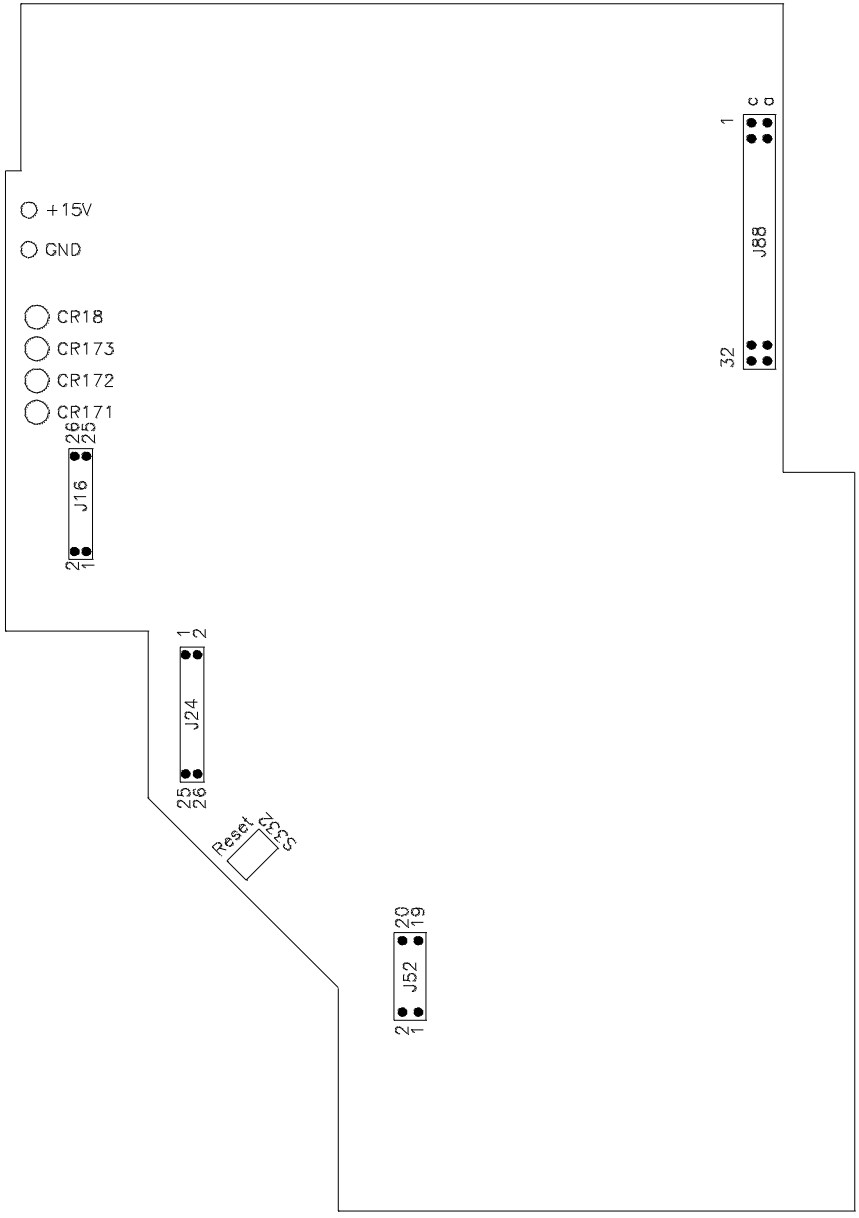

Analog Digital Analog Interface Board (ADA)

- 79881-66502 (current)

The ADA can be broken down into nine functional groups.

- 16 bit Analog to Digital Converter
- 18 bit Digital to Analog Converter (Part II)
- 10 bit Digital to Analog Converter
- I/O Control Logic
- Clock Generation
- Data Storage
- Stepper Motor Driver
- Leak Detection
- Voltage Regulation

16 Bit Analog to Digital Converter

Signals from the photodiodes are entering the 16 bit A/D converter circuit through an integrator. The input signal is being integrated. The slope of the integrated signal is proportional to the input signal. After reaching the end of a fixed period, the capacitor is discharged at a constant rate from a constant current source. During the discharge time, a count clock is allowed to go into a 16 bit counter. When the capacitor is discharged completely, the constant current source is switched off and integration starts again. There is a linear relationship between input voltage and discharge time. A counter will set an overrun bit if the input voltage was too high. In this case the capacitor cannot be discharged completely before the following integration cycle starts. Maximum input voltage level is reached when the discharge time is exactly T/2. One conversion cycle is divided into 64 single conversions with the digital reading being summed up during this time. After one complete cycle, data are buffered intermittently before they are read into the processor.

18 Bit Digital to Analog Converter (Part II)

The 18 bit D/A converter (II) is the second part of the conversion from the digital word to the analog signal for integrators. First part is accomplished on the processor board where a pulse width modulated signal (PWM) is generated out of the digital data. This signal is then fed to the current switch. Depending on the duty cycle of the signal, the larger current of the constant current source is directed to the low pass filter, from which an analog signal

for integrators can be obtained. With a slide switch (S78) an offset voltage of 0 mV or 50 mV can be set.

Figure 153 **Integration**

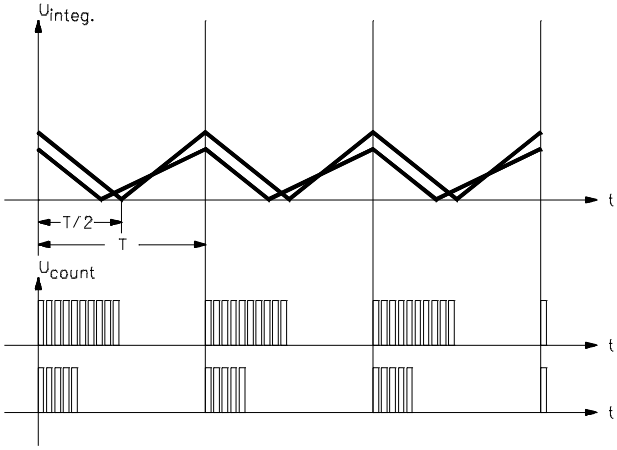

10 Bit Digital to Analog Converter

A 10 bit data word is supplied to the data storage circuit of the 10 bit D/A converter. With this data any configuration out of 1024 possible combinations is switched into the loop feedback line of a operational amplifier. Thus this stage knows 1024 different output voltages in a given range. This signal is passed through the low pass filter, resulting in an analog signal for recorders.

Figure 154 **10 bit D/A Converter**

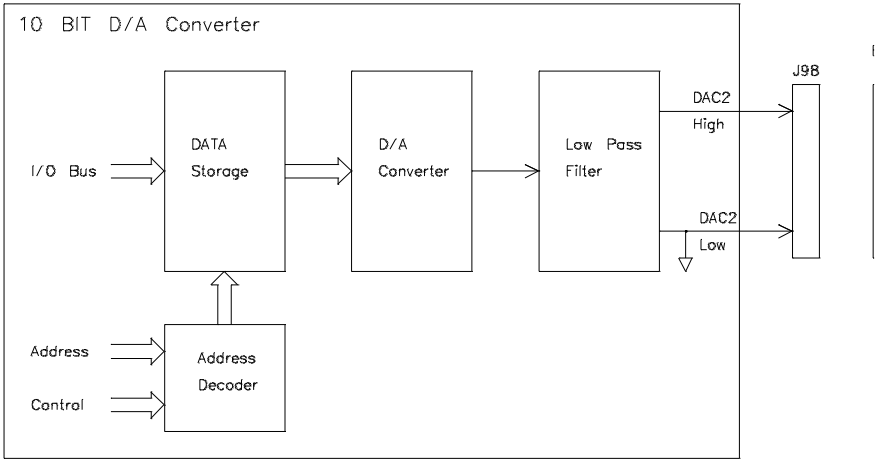

Input/Output Control

This circuitry provides correct data transfer control from and to the processor. It decides direction of transfer and selects the appropriate circuits. In addition data are buffered before they are either leaving this board or they are distributed to appropriate circuits on this board.

Clock Generation

From a crystal oscillator all frequencies which are required on the ADA are derived. In addition, the master clock is transferred to the FDP.

Data Storage

Digital data which are generated from any circuit of the ADA are buffered in the data storage circuits. As soon as the processor is ready for transfer, data are available on the detector I/O bus managed by the input/output control logic.

Voltage Regulation

The voltages ±15 V are derived from ±18 V and the +10 V is derived from +15 V.

Stepper Motor Driver

A five bit data word provides data for the stepper motor. 4 bit are used to control the phases. Each phase can be powered separately. The fifth bit decides if full power is applied (movement) or if only a reduced power is available to keep the motor stable in one of 8 possible positions.

Leak Detection

The leak sensor located in the cell compartment plugs onto J2 of the sample preamplifier board (SPA). From J1 a cable leads to J31 of the analog digital analog converter board (ADA) where the leak detection circuit is located. With the data storage circuit, the leak status signal is added to the local detector bus leading to the filter photometric detector processor board (FDP). This leak status is transferred to the HP 1090 controller via the HP 1090 detector interface that allows conversation between HP 1090 I/O bus and local detector bus.

Figure 155 **Leak Detection**

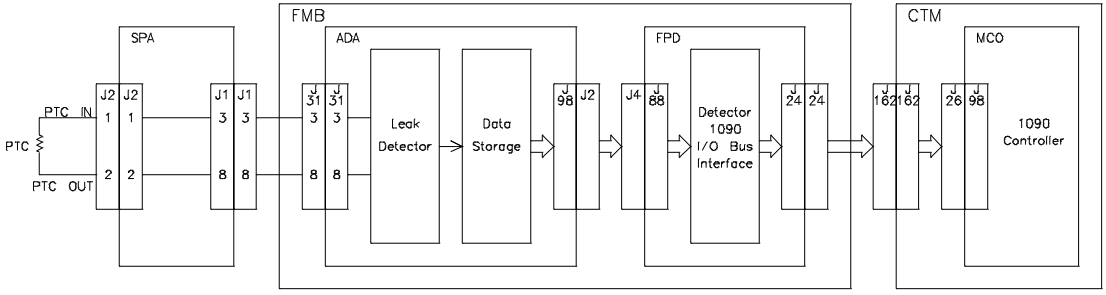

Figure 156 **Block Diagram ADA**

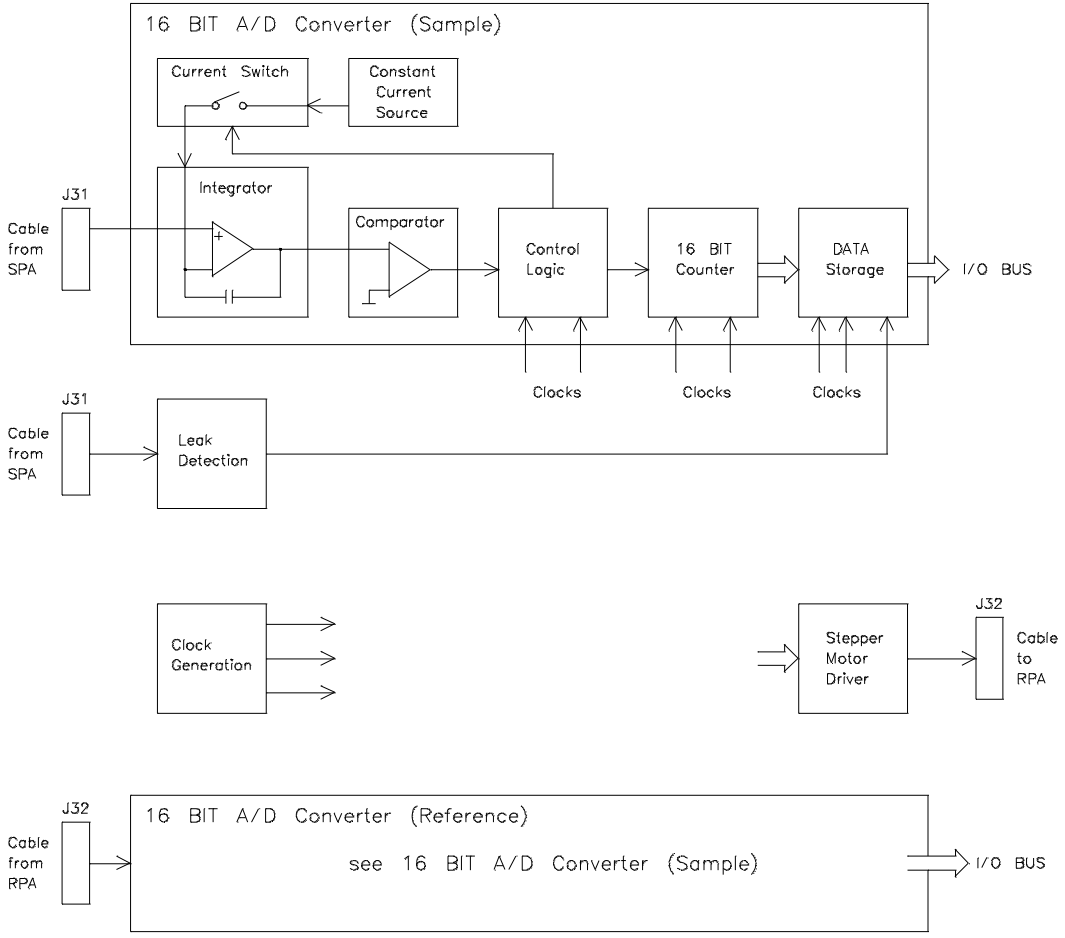

Figure 157 **Block Diagram ADA**

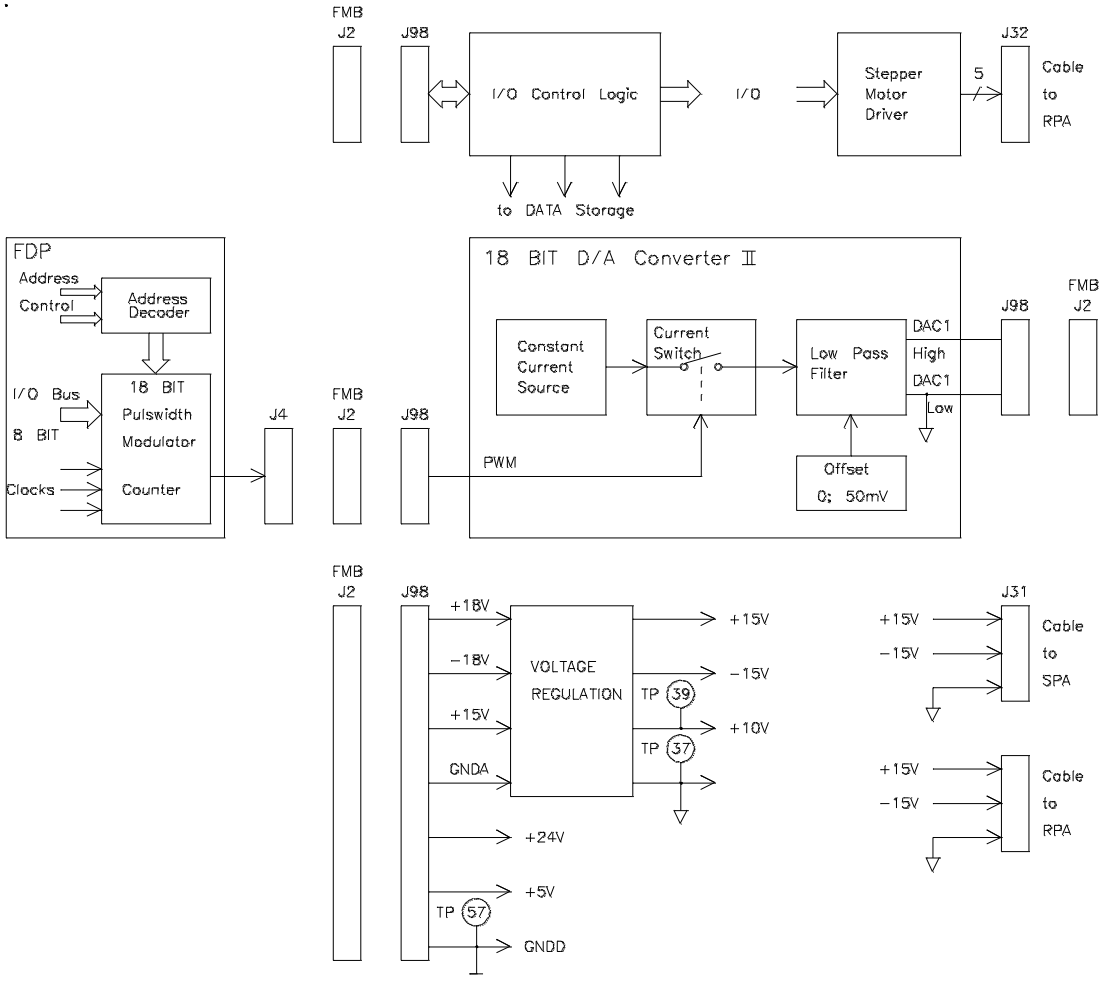

Figure 158 **Block Diagram ADA**

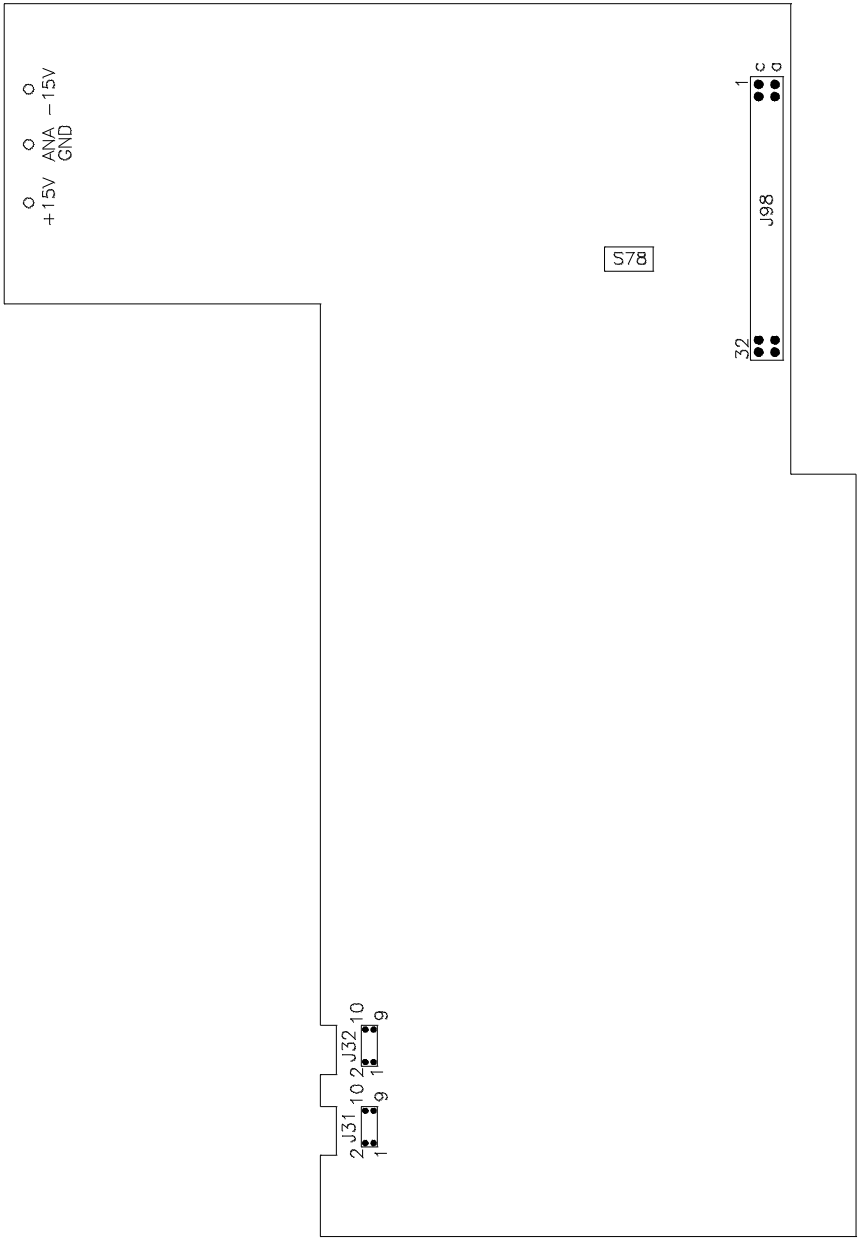

Deuterium Lamp Power Supply Board (DPS)

- 79880-66501 (obsolete)
- 79883-66501 (current)

The deuterium lamp power supply (DPS) is responsible for ignition of the lamp and for maintaining a stable current through the lamp in order to assure constant light emission.

Control of the DPS is from the filter detector processor board (FDP), from where three control signals are obtained; FILAMENT ON, LAMP ON and LAMP CURRENT HIGH. Supply voltages are provided by the HP 1090 power supply (DC) and by the main transformer (AC).

The ignition takes place in two steps. First, the filament is connected to the 4 VAC supply. After approximately 10 seconds power is applied to the anode supply and to the high voltage source. During the next 12 seconds high voltage sparks try to ignite the lamp.

As soon as the lamp is turned on, the filament is switched off and anode current regulation starts. In case that no ignition is possible the message comes after 3 attempts. The filament is switched off, an error message is generated and the LED in the DETECTOR OFF key is turned on.

After lamp ignition, the anode current begins to flow, and is regulated by the anode regulation circuitry. Current flow through a resistor generates a voltage drop which is compared against a reference voltage at a operational amplifier. The output of this amplifier controls Darlington transistors, to maintain a voltage drop equal to the reference voltage. Through relay K12, the reference voltage can be chosen for low or high current. High current reference voltage can be adjusted with potentiometer R121 or a slide switch, dependent on the revision of the DPS board. The current measurement circuit is not used by the FPD.

Lamp Ignition

For the filament supply, 4 VAC are used from the secondary windings of the main transformer. Interconnection is via filter detector motherboard (FMB) J9 and J1 to J1 of the DPS. One connection on the DPS is from J1 via fuse F31 (8 A, 2110-0342) and relay K33 to pin 2 of the lamp. The other connection is from pin 1 via GND back to J1.

Figure 159 **4 VAC Filament Supply**

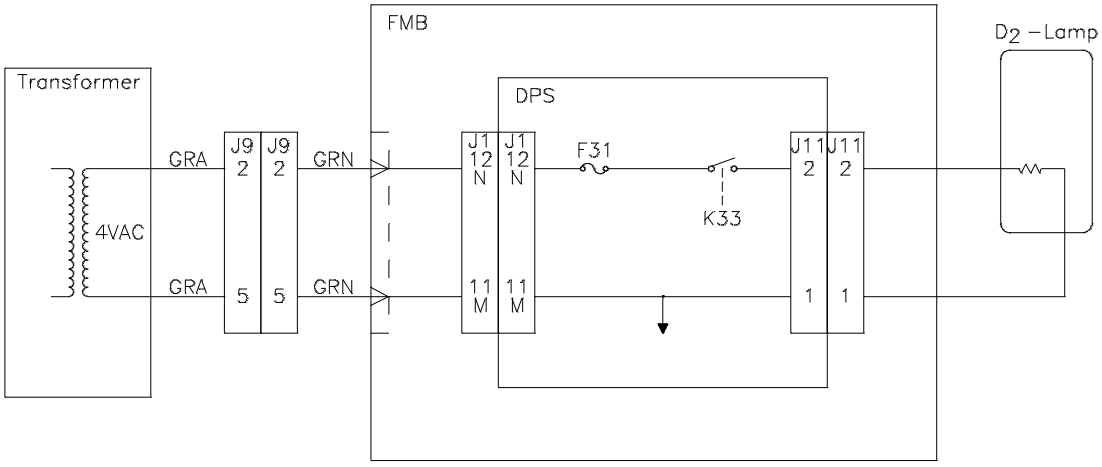

The ignition requires 2 times 85 VAC from the main transformer to power the anode supply and the high voltage source. Both sources are connected in series and provide roughly 800 VDC. Interconnection is from the FMB, J9 and J1 to the J1 of the DPS. The voltages of the two sources are put together at fuse F33 (1 A, 2110-0001) and then fed to pins 3 and 1 of the lamp.

In July 1991, DPS 79883-66501 replaced 79880-66501. The new DPS board has an improved lamp-ignition circuit which ensures more successful ignition cycles of the D_2 lamp. Ageing lamps often caused spurious discharge of the high-voltage source before the ignition voltage is reached (approx. 350 V). This was because the charging of the high-voltage source required about 40-50 ms; during which time the source could be discharged prematurely. With the new DPS board (79883-66501), the 350 V ignition voltage is reached within about 10 µs; fast enough to prevent premature discharge of the high-voltage source before the ignition voltage is reached.

With the lamp on, 85 VAC is connected via FMB, J9, J1 and DPS J1 to the anode supply. Regulated current flow uses K43, CR 221, F33, lamp, sensing resistor R131 and Q14. Sensed voltage across R131 against GND is used in the current regulator to drive Q14.

Figure 160 **High-Voltage Source**

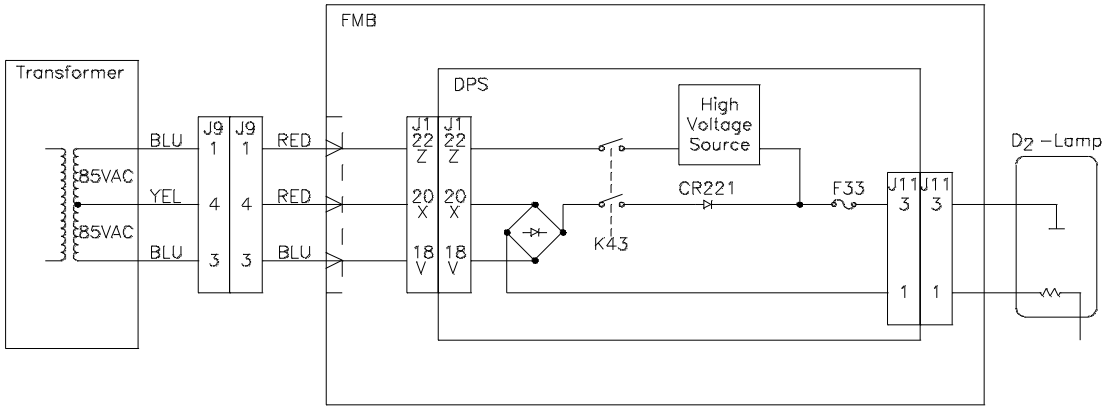

Figure 161 **Current Regulation**

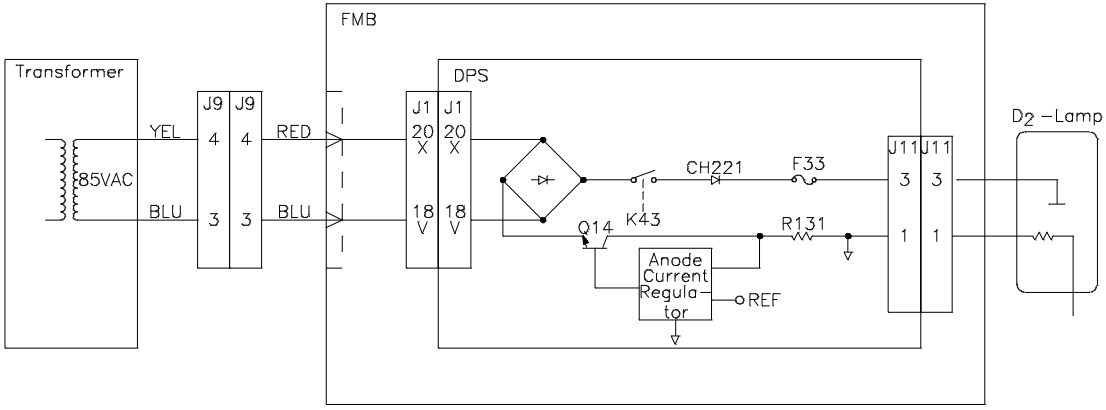

Table 45 **DPS Test Points**

Test Point	79880-66501 (Old)	79880-66501 (New)\79883-66501
TP1	0.69 V...0.81 V	±1.38 V ... ±1.62 V
	300 mA ±20 mA (LOW)	
	1.25 V...1.45 V	
	540 mA ±38 mA (HIGH)	±2.5 V ... ±2.9 V
TP2	+11.8 V...13.7 V	+12.5 V
TP3	GROUND	GROUND
TP4	±11.8 V...±13.7 V	+12.48 V
TP5	see TP1	
TP6	4 V before ignition	
	0.65 V...0.95 V	
	after ignition	
TP7	–8 V	–25 V ... –30 V (LOW)
		–30 V ... –35 V (HIGH)
TP8	–6.2 V –0.31 V	–6.2 V
TP9	–2.2 V...–4 V (LOW)	–2.3 V
	–2.4 V...–5 V (HIGH)	–3.44 V
TP10	4.9 V...5.9 V (LOW)	4.8 V ... 7 V
	7.4 V...9.1 V (HIGH)	7.2 V ... 8 V

NOTE In the old version of DPS, high lamp current adjustment is done by potentiometer R121. In the current version of DPS, R121 is removed and high lamp current adjustment is done by a 4-position slider switch S1.

Figure 162 Block Diagram DPS

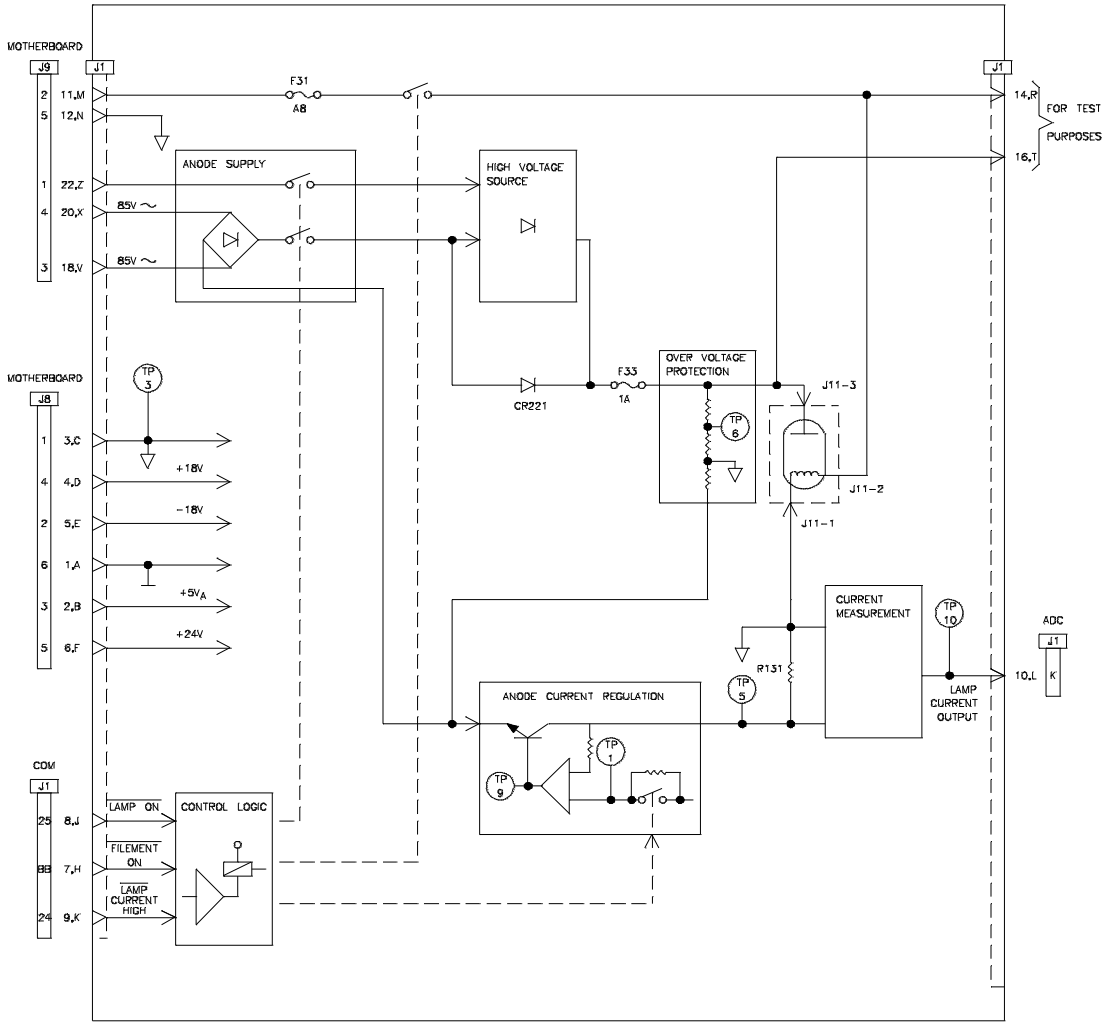

Figure 163 **Board Layout DPS**

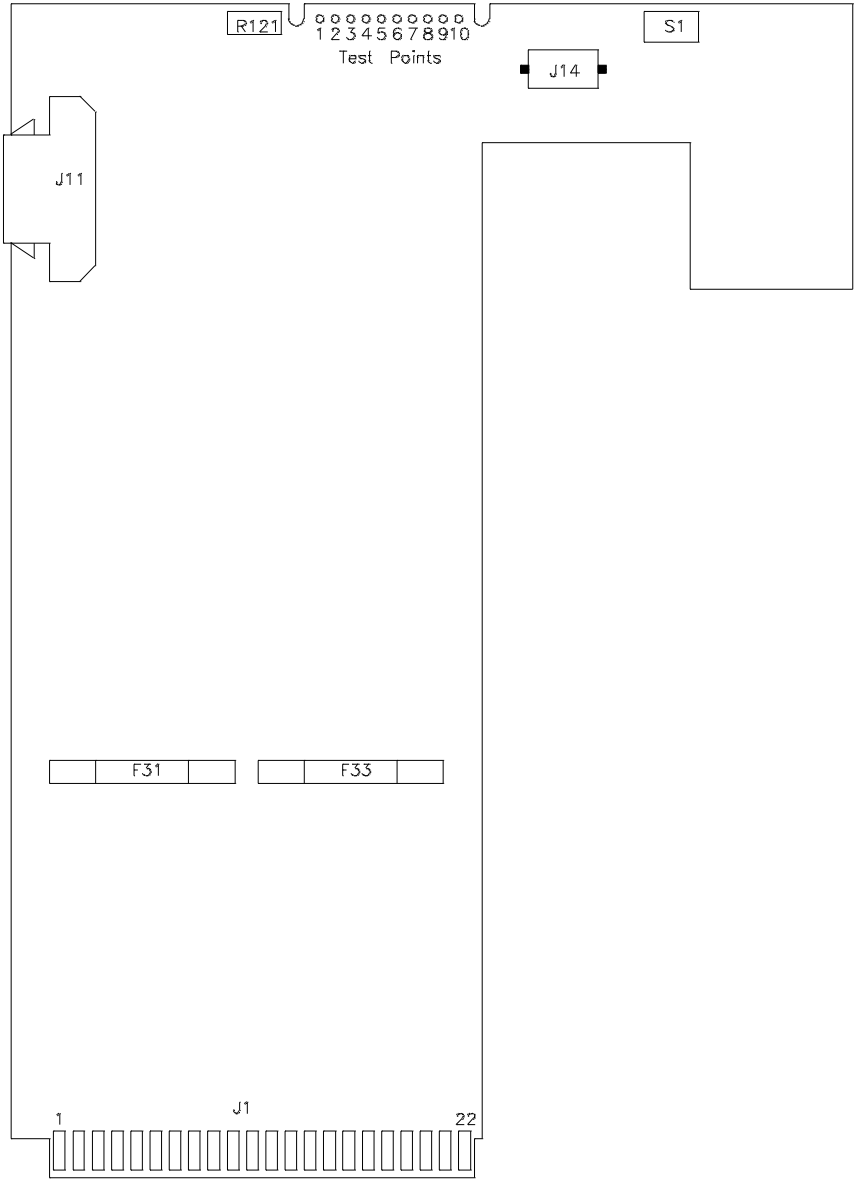

Filter Detector Motherboard (FMB)

- 79881-66501 (current)

Both analog output signals generated on the ADA are connected to an additional low pass filter and voltage divider respectively on the FMB. In addition, +5 VA can be obtained at the remote start/stop output.

The following boards plug onto the FMB:

DPS	79883-66501	J1
ADA	79881-66502	J2
FDP	79881-66503	J4

Connections are made on FMB to:

INTEGRATOR Analog Output	J5
RECORDER Analog Output	J6
SIGNAL DISTRIBUTION MODULE	J7

Connections are made from FMB to:

PSM	01090-66524	J8
Main Transformer	01090-61103 [1]	J9

1. For details refer to power supply section.

Figure 164 **Circuit Diagram Layout FMB**

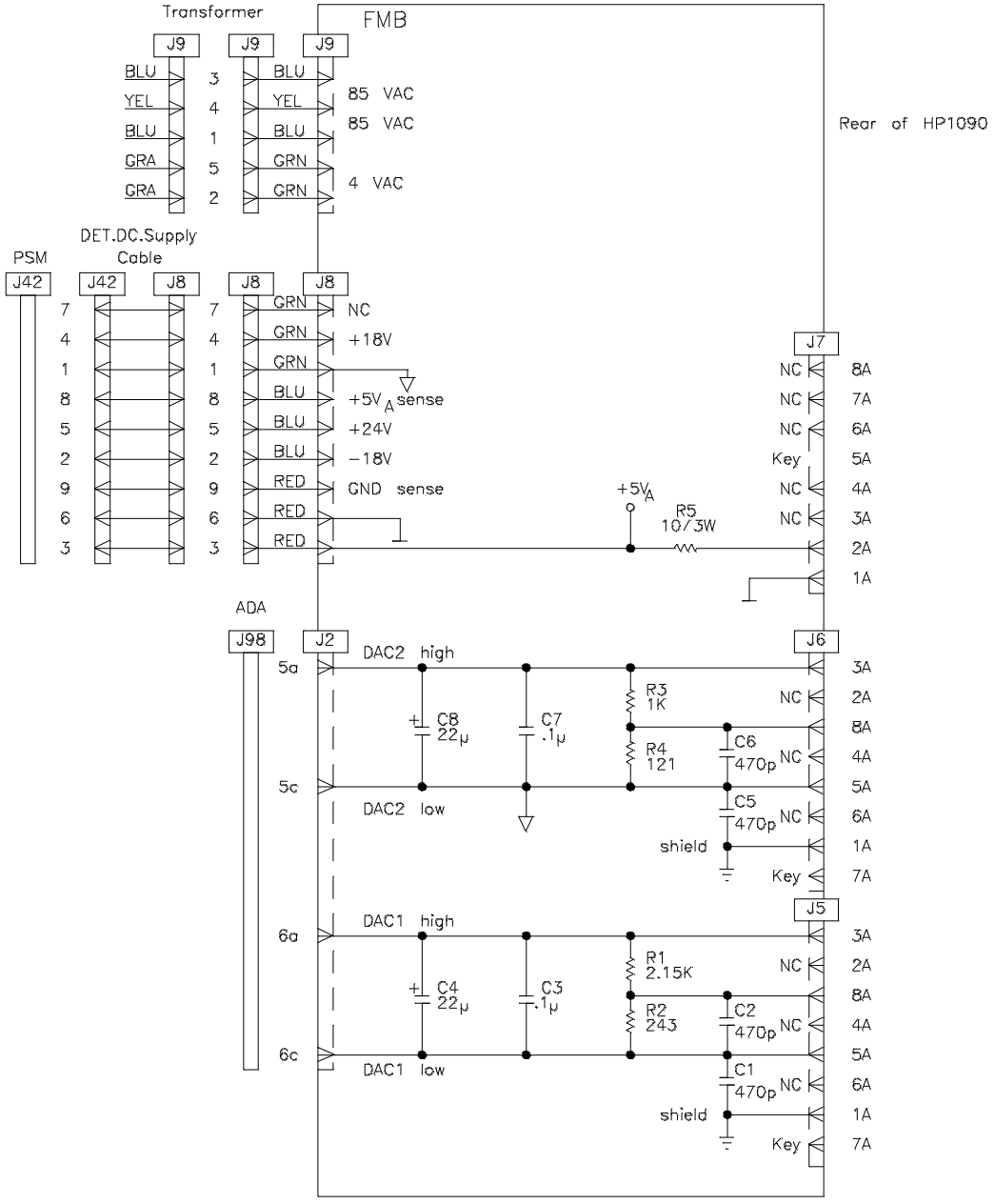

Figure 165 **Board Layout FMB**

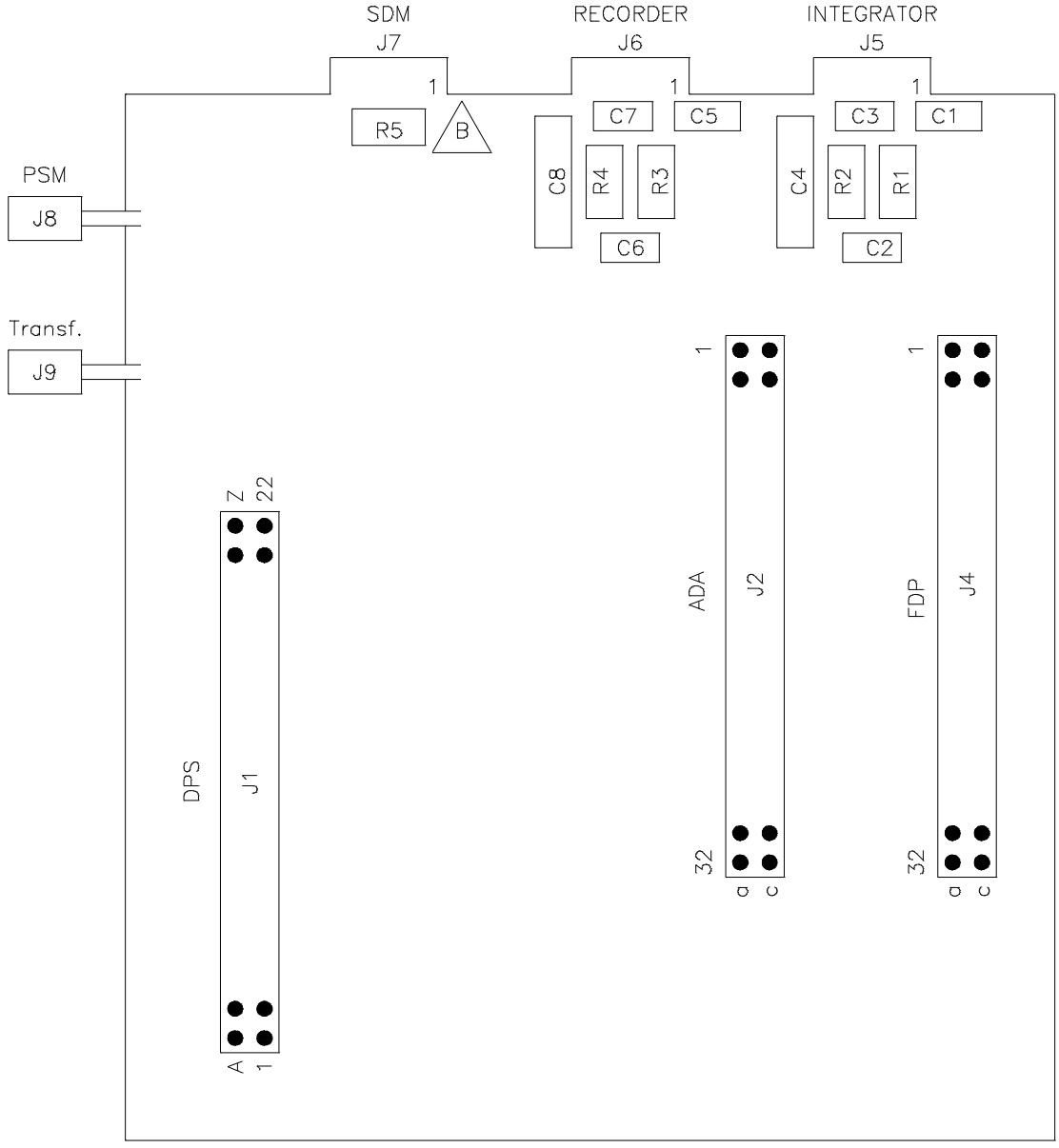

Procedures

Replacing the Photodiode Assemblies

- 79881-60006 Sample
- 79881-60007 Reference

1 Loosen the mounting screw and remove the diode assembly. The mounting screw is a 1.5 mm hex screw holding the assembly in place from the top.

2 Insert new assembly until reaching the mechanical stop. Turn the preamplifier board such that the nose finds the stop at the casting wall. No further adjustment is necessary. Fix mounting screw.

3 Check light intensity level by plotting DETSIGNAL = 1 (sample) and DETSIGNAL = 2 (reference).

4 Ideally the intensities should be the same. But due to tolerances of various components and absorbing eluents, differences between sample and reference side of up to 100% are allowed. For more details see HP 1090 Reference Manual, FPD section.

5 Set DETSIGNAL = 0 (Absorbance Signal).

Alignment of Filter Wheel

1 Turn line switch on, push POWER ON button at the front panel.

2 The stepper motor is now powered with the holding current and held in any one out of 8 possible positions.

3 Turn the wheel manually until you have access to the screw on the filter wheel.

4 Loosen this screw and keep the wheel in this position.

5 Adjust filter wheel such that there is a distance of 19.7 ±0.5 mm between left edge of the cut-out and right hand edge of the filter wheel. Fix wheel with screw on stepper motor shaft. In this position the light beam is centered onto the filter in the light path. See “Alignment of Filter Wheel” on page 327.

6 Now turn wheel that also the second screw can be fixed.

7 Insert a filter into the left most slit of the wheel accessible from the top and

fix it with the spring.

8 Push detector on key. Observe turn-on and initialization. Depending on whether a filter is installed at the selected filter position or not, Error Messages ED11 and ED12 may appear.

NOTE The 19.7 mm distance has to be measured between two indicated positions. The left position is OK. The right position has to be moved left to the next edge of the filter wheel.

Figure 166 **Alignment of Filter Wheel**

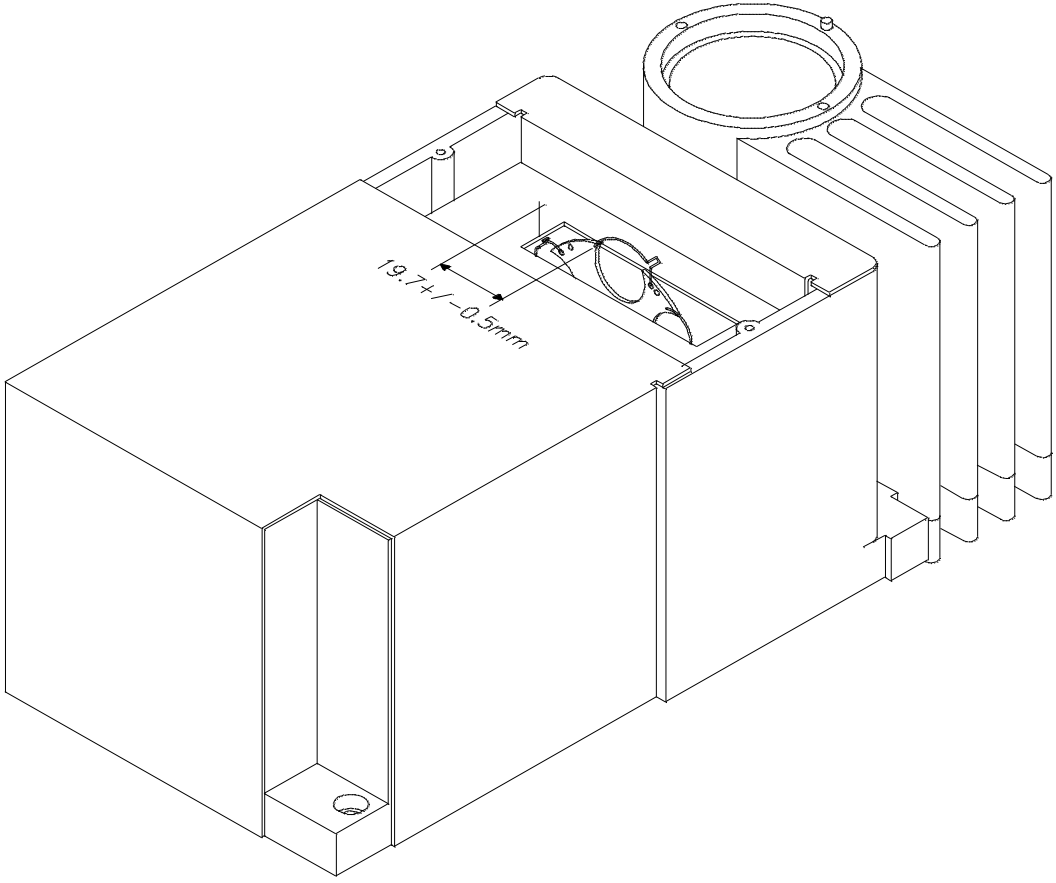

Diagnostics and Troubleshooting

Error Messages

A good general description of the filter detector error messages can be found in the Operator's Handbook and in the HP 1090 Guide Books.

ED10

- ❏ Possible failure of ADA or FDP boards.
- ❏ Likely failure of sample or reference photodiodes such that the difference between their two outputs exceeds the detector autobalance capability. If there has recently been a flow cell leak, the sample photodiode may have been sprayed by mobile phase, blinding it.

ED11, 12

- ❏ In addition to filter missing, check for a defective gasket on the cell door in older detectors. Newer detectors incorporate the light isolator fixture.

ED13

- ❏ Check for the general lamp ignition failure modes (see "ED13 Lamp Ignition Problem" on page 329).

ED15

- ❏ Possible ADA board or FDP board failure, particular the FDP board.
- ❏ Check for correct seating of the ADA board and, particularly, the FDP board.
- ❏ Check for good connection of FPD control ribbon cable.
- ❏ Check for defective FPD control ribbon cable.

ED20

- ❏ If an actual leak is not present, check for defective ADA board or defective leak sensor assembly.

Failure of the system to recognize the presence of the detector

- ❏ Check for correct seating of the FDP board.
- ❏ Check for good connection of the FPD control ribbon cable.
- ❏ Check main power supply PWS #2.
- ❏ Replace the FDP board.
- ❏ Replace the FPD control ribbon cable.

ED13 Lamp Ignition Problem

The lamp is ignited and controlled by the DPS, but ignition verification is done by the signal electronics. Therefore, if the lamp actually fails to ignite or the detector fails to recognize lamp ignition the result is the same. Assuming that a new lamp does not fix the problem, proceed as follows:

Measurement of Lamp Parameters

The DPS board has many test points to verify its own operation. The best place to measure the lamp parameters, however, is at the lamp connector directly.

WARNING **High voltage may be present on the anode wire.**

Figure 167 **Lamp Connector**

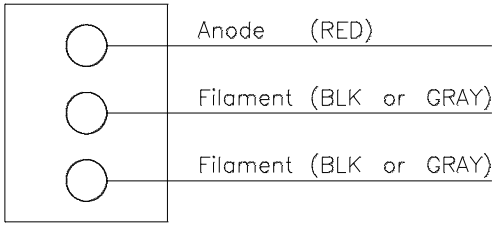

NOTE The integrity of these pins must always be considered when troubleshooting.

1. Disconnect the lamp from the connector
2. With the meter set to small scale AC, measure between the two filament wires.

During the first 10 seconds after lamp turn-on, the typical value of filament voltage is 2.5 – 4 VAC. If filament voltage is not present, try the following:

- ❏ replacing the filter detector processor board;
- ❏ replacing the DPS board;
- ❏ checking connector J9 (side of FPD module) for loose or poorly crimped wires;
- ❏ replacing the main power transformer (very unlikely!).

3 Set the meter to the 2000 V range DC, and measure from the anode wire to any good ground on the mainframe.

After 10 seconds after turn-on has elapsed, 700 – 800 V can be seen on the meter. Only with the lamp disconnected does this ignition voltage remain on the meter long enough to be seen. The detector wire applies ignition voltage three times, then set the ED13 message.

If ignition voltage is not present, try the following:

- ❏ replacing the filter detector processor board;
- ❏ replacing the DPS board;
- ❏ checking connector J9 (side of FPD module) for loose or poorly crimped pins;
- ❏ replacing the main power transformer (very unlikely!).

4 Reconnect the lamp and measure from the anode wire to chassis ground.

When the system is working manually, an anode voltage of 70-80 VDC can be measured after the lamp is in conduction. This, of cause, will not be seen if ED13, for any reason, is set.

Other Possibilities

If the ED13 is not caused by the filter detector processor board on the lamp power circuitry, try the following:

- ❏ replacing the ADA board;
- ❏ replacing the large DPS capacitor;
- ❏ replacing the reference photodiode;
- ❏ check the reference photodiode ribbon cable.

Signal Problems

- noise/dead

The best method of troubleshooting signal problems is the use of the DETSIGNAL = functions.

Diagnosis with the DETSIGNAL= Function

Measure the sample and reference signals.

Reference Light Path Problems

If the reference side shows problems, try the following:

❏ replace the ADA board;

❏ check the reference photodiode ribbon cable;

❏ replace the reference photodiode.

Sample Light Path Problems

If the sample side shows problems, try the following:

❏ Determine if the flow cell is responsible for reduction in light throughput.

❏ Check the sample photodiode ribbon cable.

❏ Replace the ADA board.

❏ Replace the sample photodiode.

Both Sample and Reference Paths Defective

If both signals show problems, change the lamp. If just one signal shows problems, proceed as described below.

❏ New lamp.

❏ Consider the possibility of defective output channel. Connect the signal cable to the other channel. If one channel proves to be defective, try the ADA board, filter detector processor board and FDM board in that order.

❏ Consider the possibility of a defective signal cable. Remove the cable and repeat the DETSIGNAL = test while measuring the channel output directly with a meter.

❏ Replace the ADA board, FDP board and FDM board in that order.

❏ Try another filter.

❏ Replace the optical unit.

Parts Identification

First Serial Number

The HP 1090 series II was introduced in May 1990. The first serial number was **3015G03281**.

Mainframe (MF)

Top Cover Parts

Figure 168 **Mainframe - Top Cover Parts**

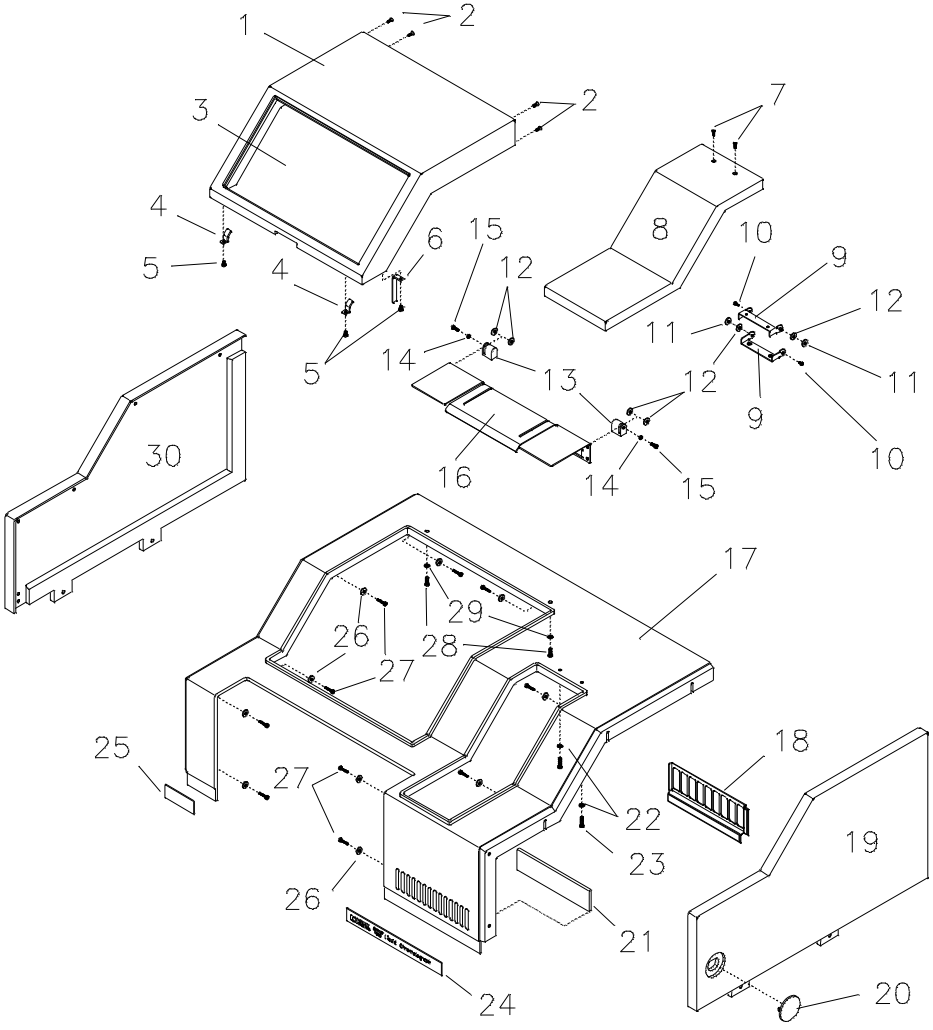

Table 46 **Top Cover Parts**

Item	Description	Part number
1 *	Cover ALS Assembly Series 2 (useable for series 1)	01090-64112
2 **	Screw M3 x 0.5, 8 mm lg	0515-1430
3	Window Cover ALS	01090-04133
4	Angle Window	01090-00509
5	Screw TPG 4-20 - 0.3 in	0624-0045
6	Angle Safety	01090-00510
7	Screw M3 x 0.5, 6 mm lg	0515-0886
8	Cover Detector Assembly Series 2	01090-64111
9	Cover Hinge	01090-05104
10	Screw M3 x 0.5, 8 mm lg	0515-0897
11	Washer M3	3050-0891
12	Disc Hinge	01090-24104
13	Body Hinge	01090-25101
14	Washer M4	3050-0893
15	Screw M4 x 0.7, 16 mm lg	0515-0983
16	Hinge Cover	01090-05103
17 ***	Cover Main Assembly Series 2	01090-64113
	Screw M5 - 25 mm lg, for Top Cover	0515-1119
18	Panel Filter Cover	01090-00214
19	Frame Top Right Series 2	01090-47702
20	Cover	01040-41201
21	Foam Filter small	3150-0463

Table 46 **Top Cover Parts**

Item	Description	Part number
22	Washer M3	3050-0891
23	Screw M3 x 0.5, 12 mm lg	0515-1110
24	Label right Series 2	01090-04143
25	Label left Series 2	01090-04102
26	Washer	3050-0139
27	Screw TGP 8-32 - 0.62 in	0624-0217
28	Screw M4 x 0.7, 10 mm lg	0515-1114
29	Washer M4	3050-0893
30	Frame Top Left Series 2	01090-47701
31	Screw TPG 4-20 0.3 in	0624-0045

* Includes items 3, 4, 6, 16, supplied ready assembled.
** Includes item 9, supplied ready assembled.
*** Includes items 1, 8, 19, 24, 25, 30, ready assembled.

Base Parts

Figure 169 **Mainframe - Base Parts**

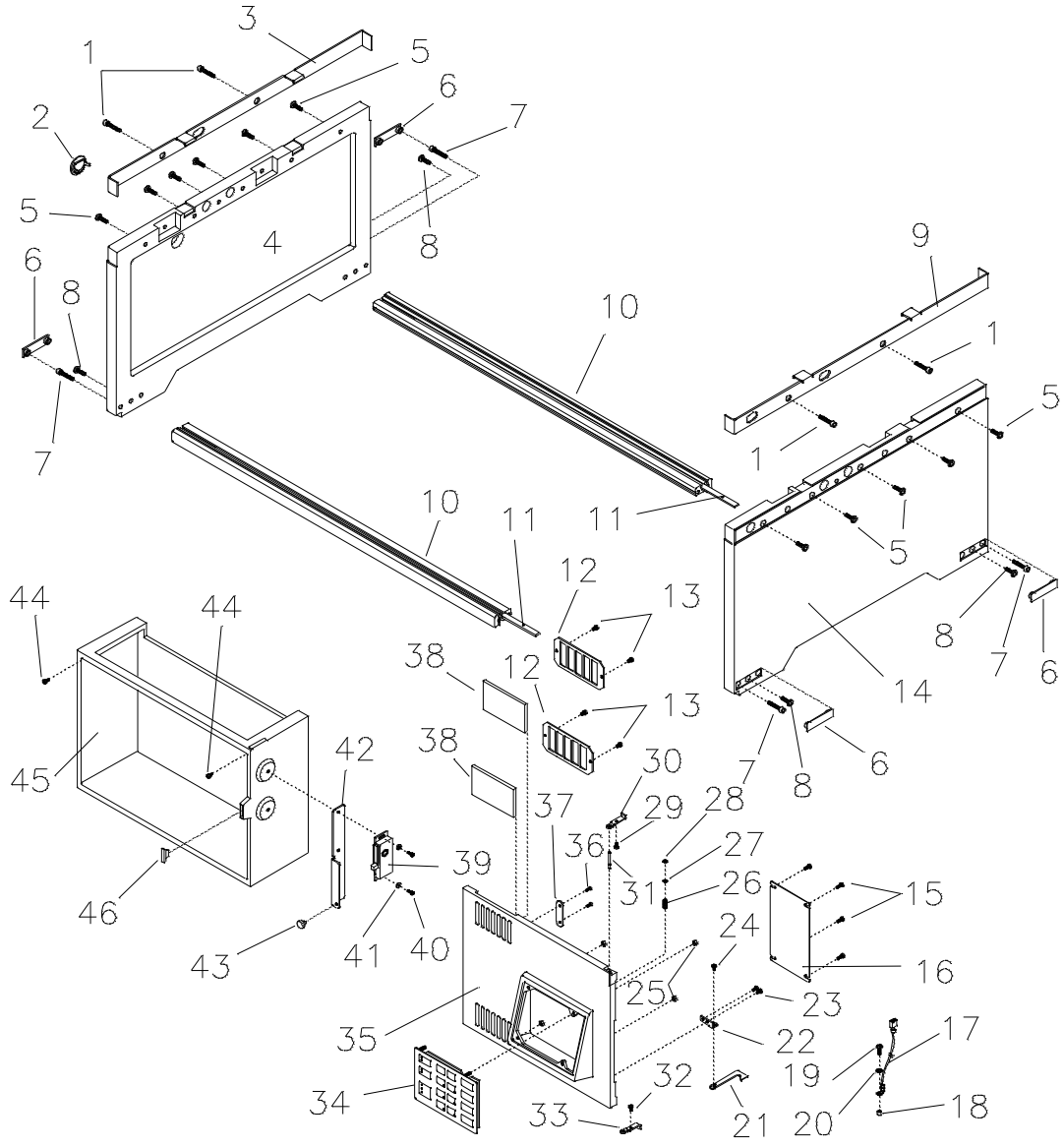

Table 47 **Mainframe - Base Parts**

Item	Description	Part number
1	Screw M5 - 25 mm lg, for top cover	0515-1119
2	Cover Interface	01040-41201
3	Cover Left Series 2	01090-04142
4	Frame Base Left Series 2	01090-47703
5	Screw M5, 16 mm lg	0515-0562
6	Cover	01090-40101
7, 8	Screw M5, 25 mm lg	0515-0851
9	Cover Right Series 2	01090-04144
10	Extrusion Series 2	01090-20504
11	Bar	no longer available
12	Plate Filter	01090-04118
13	Screw TGP 6-20, 0.375 in	0624-0045
14	Frame Base Right Series 2	01090-47704
15	Screw TGP 6-20, 0.375 in	0624-0045
16	Cover Protecting	01090-04123
17	DKI - Ground Cable	01090-61620
18	Spacer	0380-0004
19	Screw M4x0.7 , 12 mm lg	0515-1114
20	Washer	2190-0409
21	Catch Door	01090-05001
22	Angle Limit	01090-00506
23	Screw TGP 6-20, 0.375 in	0624-0045
24	Screw M3 x 0.5, 6 mm lg	0515-0886
25	Nut M4 for Keyboard	0535-0023

Table 47 **Mainframe - Base Parts**

Item	Description	Part number
	Washer M4 Keyboard	3050-0893
26	Spring Compression	1460-1597
27	Retaining Spring	0510-0015
28	Washer Shoulder	3050-0499
29	Screw M3 x 0.5, 6 mm lg	0515-0886
30	Hinge Keyboard, LUSI	01090-05111
31	Rod Hinge	01090-23702
32	Screw M3 x 0.5, 6 mm lg	0515-0886
33	Hinge Keyboard	01090-05111
34	SYK Board Series 2	01090-66552
35	Keyboard Door Series 2	01090-40303
	Keyboard Door Series 2, complete with SYK	01090-60010
36	Screw TGP 4-20, 0.375 in	0624-0347
37	Magnet - Keeper	01090-02302
38	Filter Foam, small	3150-0463
39	Catch Magnetic	1390-0421
40, 41	Screw TGP 6-20, 0.375 in	0624-0045
42	Catch Plate	01090-00512
43	Bumper	0403-0086
44	Screw M4 x 0.7, 10 mm lg	0515-1114
45	Solvent Cabinet Series 1	01090-68706
	Solvent Cabinet Series 2	01090-68716
46	Bumper	01090-47402

Inner Mainframe Parts

Figure 170 **Mainframe - Inner Parts**

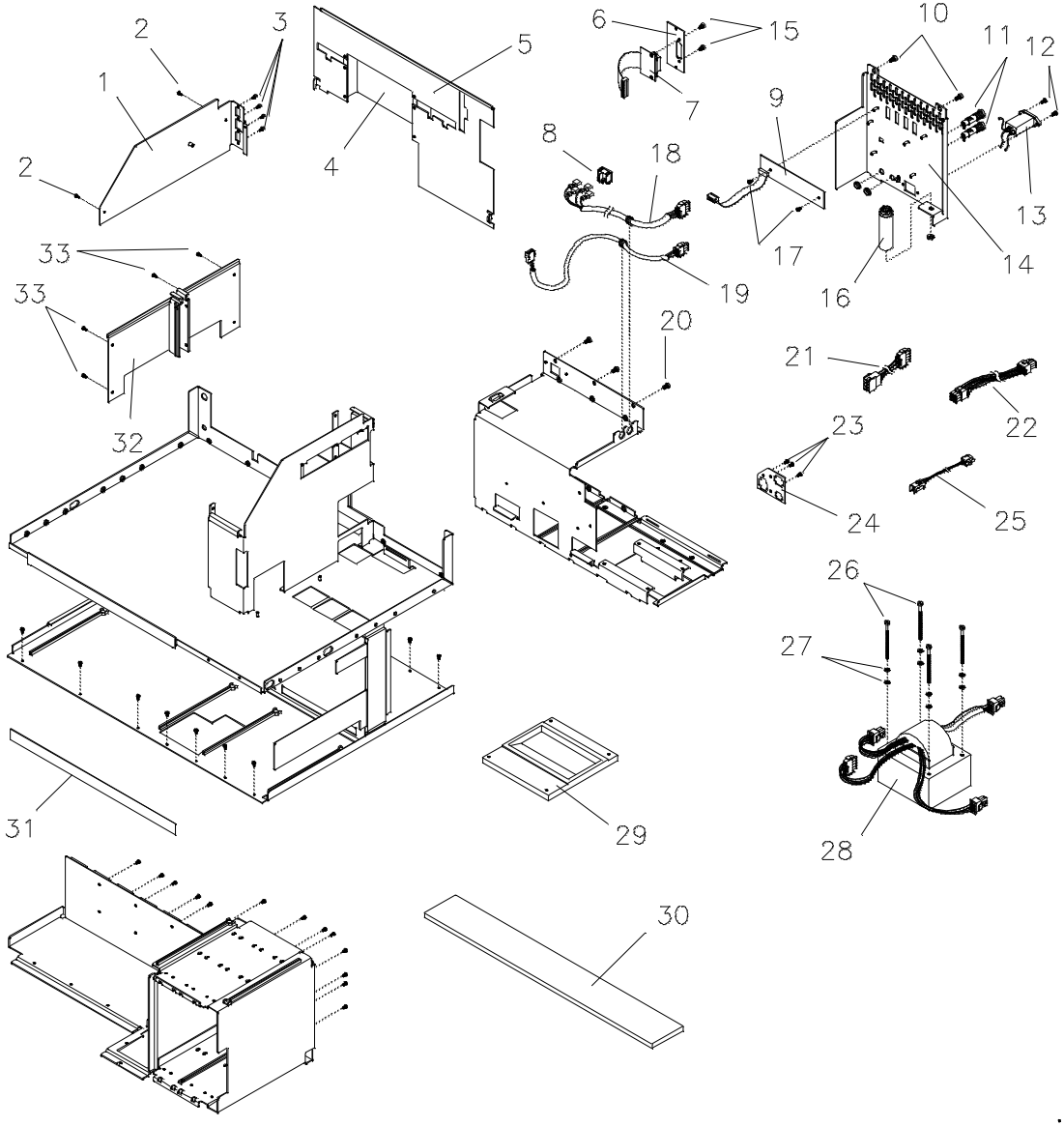

Table 48 **Mainframe - Inner Parts**

Item	Description	Part number
1	Plate CC	01090-04104
2	Screw M3 x 0.5, 6 mm lg	0515-0886
3	Screws	1251-7788
4	Cover Rear ALS	01090-04122
5	Plate Rear Series 2 ALS	01090-04145
	Plate Rear Series 1 TCAS	79847-04106
	Plate Rear Series 2 TCAS	79847-04111
6	Panel GPIB	01090-00202
7	GPIB Interface Cable/Board (includes items 6, 15)	5061-3352
8	Power Switch	no longer available
9	External Contacts Interface (ECI)	01090-66526
10	Screw M5 x 0.8, 10 mm lg	0515-0561
11	Fuse F1, 4 A 220 V	2110-0055
	Fuse F1, 8 A 120 V	2110-0342
	Fuse holder Cap	2110-0565
	Fuse holder	2110-0566
	Fuse holder Nut	2110-0569
12	Screw M3 x 0.5, 8 mm lg	0515-1430
13	Line Filter 220 V	9135-0038
	Line Filter 120 V	9135-0202
14	Rear Panel	01090-00206
15	MTG Stud (part of item 7)	0380-1332
16	Capacitor 3 µF ± 10% 220 V	0160-5712

Table 48 **Mainframe - Inner Parts**

Item	Description	Part number
	Capacitor 10 µF ± 10% 120 V	0160-5713
17	Screw M3 x 0.5, 6 mm lg	0515-0886
18	Power Switch Cable	01090-61606
19	Oven Primary Cable	01090-61607
20	Screw M5 x 0.8, 10 mm lg	0515-0561
21	Pump Primary Cable	01090-61609
22	Detector DC Supply Cable	01090-61605
23	Screw M4 x 0.7, 6 mm lg	0515-0898
24	Plate	no longer available
25	Pressure Signal Cable	01090-61611
26	Screw M5 x 0.8, 80 mm lg	0515-0204
27	Washer	2190-0587
28	Power Transformer	01090-61103
29	Insulation Detector	4040-2152
30	Filter foam large	3150-0462
31	Label Oven Series 2	01090-04141
32	Plate Side	no longer available
33	Screw M3 x 0.5, 6 mm lg	0515-0886
	PCB Guide orange (for ISD slot)	5040-4629
	Screw M3 x 0.5, 6 mm lg (for securing CTM to mainframe)	0515-0886
	PCB Guide (for PWR, PSC slot)	0403-0102
The parts listed below are holding the BCT board to the SDS metal chassis:		
	Bracket 3 (left side, 2 of same type)	79835-02303

Table 48 **Mainframe - Inner Parts**

Item	Description	Part number
	Bracket 1 (right side, top)	79835-02301
	Bracket 2 (right side, bottom)	79835-02302
	Knurled Nut for Bracket 3	5021-186
	Screw M3 x 0.5, 6 mm lg to fix the board	0515-0886

NOTE

For DC fan parts, see Table 50 on page 346.
For AC fan parts, see Table 49 on page 345.

AC- Fan

Figure 171 **AC Fan Parts**

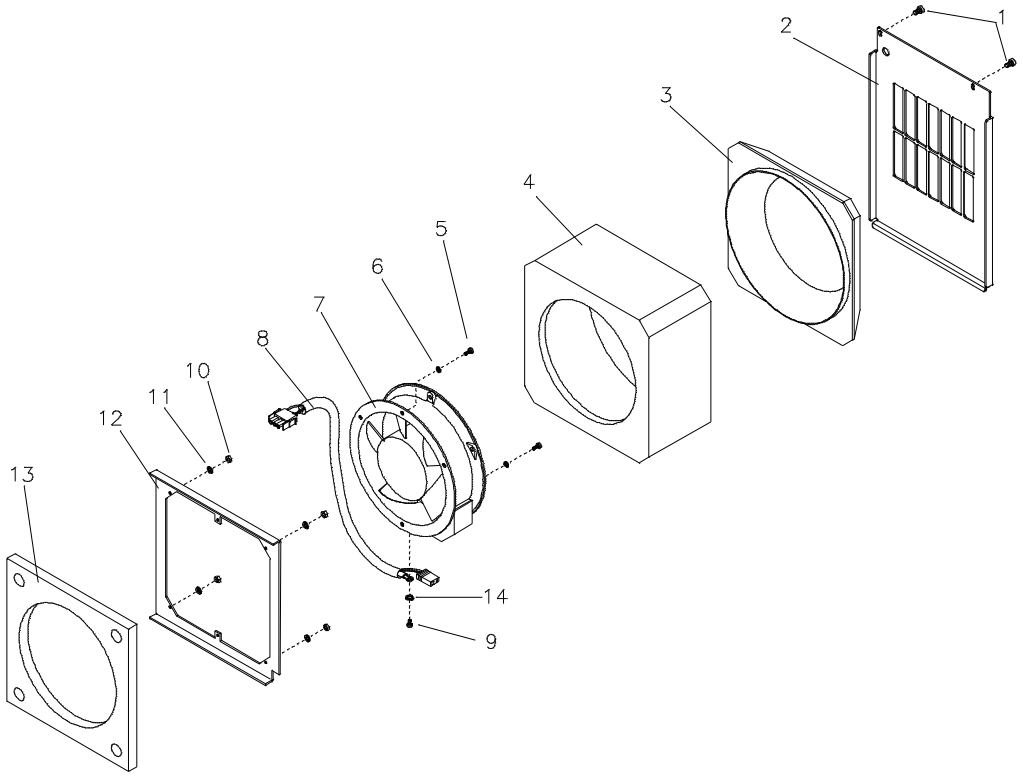

Table 49 **AC Fan Parts**

Item	Description	Part number
1	Screw M5, 6 mm lg	0515-1510
2	Panel Fan	01090-00208
3	Outlet Fan, Front	01090-42303
4	Outlet Fan, Back	01090-42304
5	Screw M4 x 0.7, 10 mm lg	0515-1114
6	Washer M4	3050-0893
7	AC Fan, Tube Axial 115 V	3160-0421
8	Cable Fan	01090-61608
9	Screw M4x0.7, 10 mm lg	0515-1114
10	Nut M4	0535-0023
11	Washer LK M4	2190-0586
12	Plate AC Fan	01090-04105
13	Insulation Fan AC Fan	4040-2151
14	Washer LK M4	2190-0586

DC- Fan

Figure 172 **DC Fan Parts**

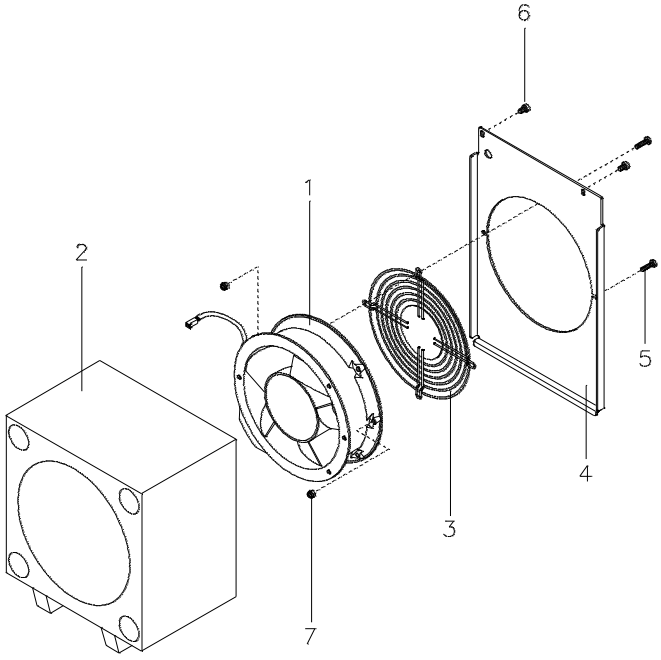

Table 50 **DC Fan Parts**

Item	Description	Part number
1	Fan Assembly 24 VDC	01090-68520
2	Air Tunnel	01090-40401
3	Finger Guard	3160-0419
4	Panel Fan	01090-00228
5	Screw M4 x 0.7, 16 mm lg	0515-0983
6	Screw M5, 6 mm lg	0515-1510
7	Nut M4	0535-0056

Bottle Holder Assembly

Figure 173 **Bottle Holder Assembly Parts**

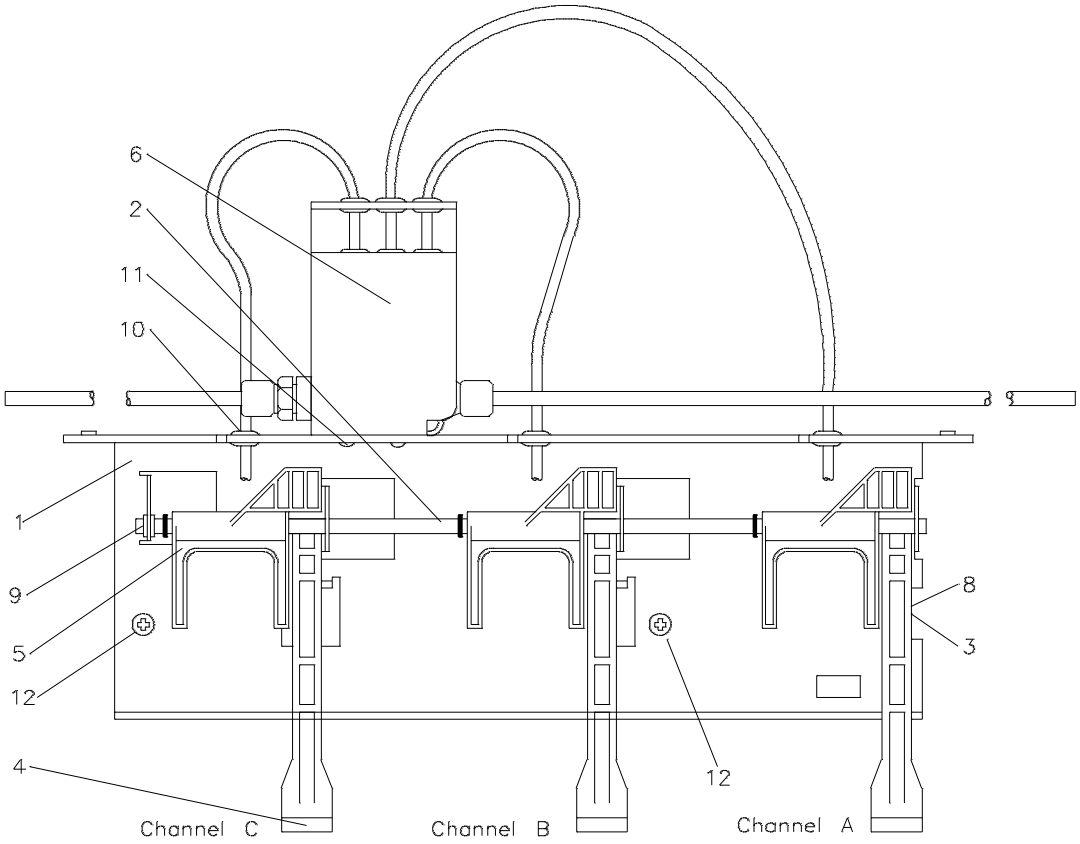

Table 51 **Bottle Holder Assembly Parts**

Item	Description	Part number
	Bottle Holder Assembly	01090-60003
1	Base Bottle	01090-07703
2	Shaft Long	01090-26103
3	Shaft Short	01090-26104
4	Rail	01090-43701
5	Catch	01090-45001
6	Helium Outlet	01090-67602
8, 9	Retainer Ring	0510-0045
10	Grommet	0400-0002
11	Screw M3 x 0.5, 6 mm lg	0515-0886
12	Screw M4, 6 mm lg for securing bottle holder assembly to mainframe	0515-0898
	Plug Helium Inlet Capillary (isocratic or binary)	01090-23701

Fuses

Table 52 **Fuses**

Location	Value	Part number
Rear of 1090 (110 V)	4 A	2110-0055
Rear of 1090 (110 V)	8 A	2110-0342
PWS 01090-66522	8 A	2110-0342
	2 A	2110-0303
PSC 01090-66523	5 A	2110-0030
	2 A	2110-0303
ECI 01090-66526 Rev. A	0.2 A	2110-0235
	0.5 A	2110-0202
ECI 01090-66526 Rev. B	0.25 A	2110-0004
CTM 01090-66533/-66537	3 A	2110-0003
MDR 79835-66513/-66533	0.75 A	2110-0360
MCD 79835-66521	0.75 A	2110-0360
CVD 79835-66530/-66534	0.375 A	2110-0421
RCI 01090-66538	0.25 A	2110-0004
DKI 01090-66507	0.25 A	2110-0004
DPS 79880/3-66501	1 A	2110-0001
	8 A	2110-0342

Colors

Table 53 **Colors**

Instrument	Description	Part number
Series I	Cocoa Brown	6010-0694
	Pearl Gray	6010-0695
Series 2	Parchment White	6010-1148
	Dove Gray	6010-1146

System (SYS)

Table 54 **System Replacement Parts**

Description	Part number
Mainframe Controller Board (MCO)	01090-69542
MEM Board for MCO	01090-66573
MCO/MEM Assembly	01090-69708
System Keyboard (SYK) Series 2	01090-66552
GPIB Interface (IBU)	01090-66535
Controller Mother Board (CTM)	01090-66537
Fuse on CTM 3 A	2110-0003
External Contacts Interface (ECI)	01090-66526
Fuse 250 V, 250 mA fast on ECI	2110-0004
Remote Control Interface (RCI)	01090-66538
Fuse 250 V, 250 mA fast on RCI	2110-0004
IOC-SYK-CTM Cable (I/O bus)	01090-61614
SYK-COM Cable (DAD control)	01090-61616
SYK Supply Cable	01090-61612

Local User Interface (LUSI)

Table 55 **LUSI Replacement Parts**

Item	Description	Part number
	Local User Interface Series 2 includes items 1 to 28	01090-60011
1	Keyboard Door LUSI Series 2	01090-40304
2	Keeper Magnetic	01090-02302
3	Screw TPG 2-28	0624-0347
4	Filter, LUSI	01090-02701
5	Filter, Panel	01090-00219
6	Screw TAP 6-20 x 0.5	0624-0045
7	DDK Board Series 2	01090-66553
8	Screw TAP 6-20 0.5	0624-0045
9	Filter, Panel	01090-00219
10	Filter, LUSI	01090-02701
11	Hinge Keyboard	01090-05111
12	Rod Hinge	01090-23702
13	Screw M3 x 0.5, 6 mm lg	0515-0886
14	Washer Shoulder	3050-0499
15	Retaining Ring	0510-0015
16	Spring Compression	1460-1597
17	Screw TAP 6-20 0.5	0624-0045
18	Screw M3 x 0.5, 6 mm lg	0515-0886
19	Angle Limit	01090-00506
20	Catch Door	01090-05001
21	Upper Bar	01090-03707

Table 55 **LUSI Replacement Parts**

Item	Description	Part number
22	Washer M3	3050-0891
23	Screw M3 x 0.5, 6 mm lg	0515-0886
24	Cover Protection LUSI	01090-04134
25	Screw TAP 6-20 0.5	0624-0045
26	DKI-Board Assembly	01090-66507
27	Screw M3 x 0.5, 6 mm lg	0515-0886
28	Lower Bar	01090-03708
	Plate LUSI	01090-00203
	DKI Ground Cable	01090-61620
	DKC Board	01090-69509
	MEM Board (for DKC) Series 1	01090-66565
	MEM Board (for DKC) Series 2	01090-66575
	LIL Board	01090-66510
	CIL Board	01090-66511
	LIB Board Series 1	01090-66529
	LIB Board Series 2	01090-66579
	Screw M3 x 0.5, 6 mm lg for DK C/MEM Board	0515-0886
	Cable HP-IL (1 meter)	82167-60002
	GPIB Cable Board	5061-3352
	LIB-COM Cable	01090-61621
	DKC Lithium Battery	1420-0361
	DKC-DKI Cable	01090-61619
	DKI-BCT-CTM Cable (I/O bus)	01090-61614

Figure 174 **LUSI Parts**

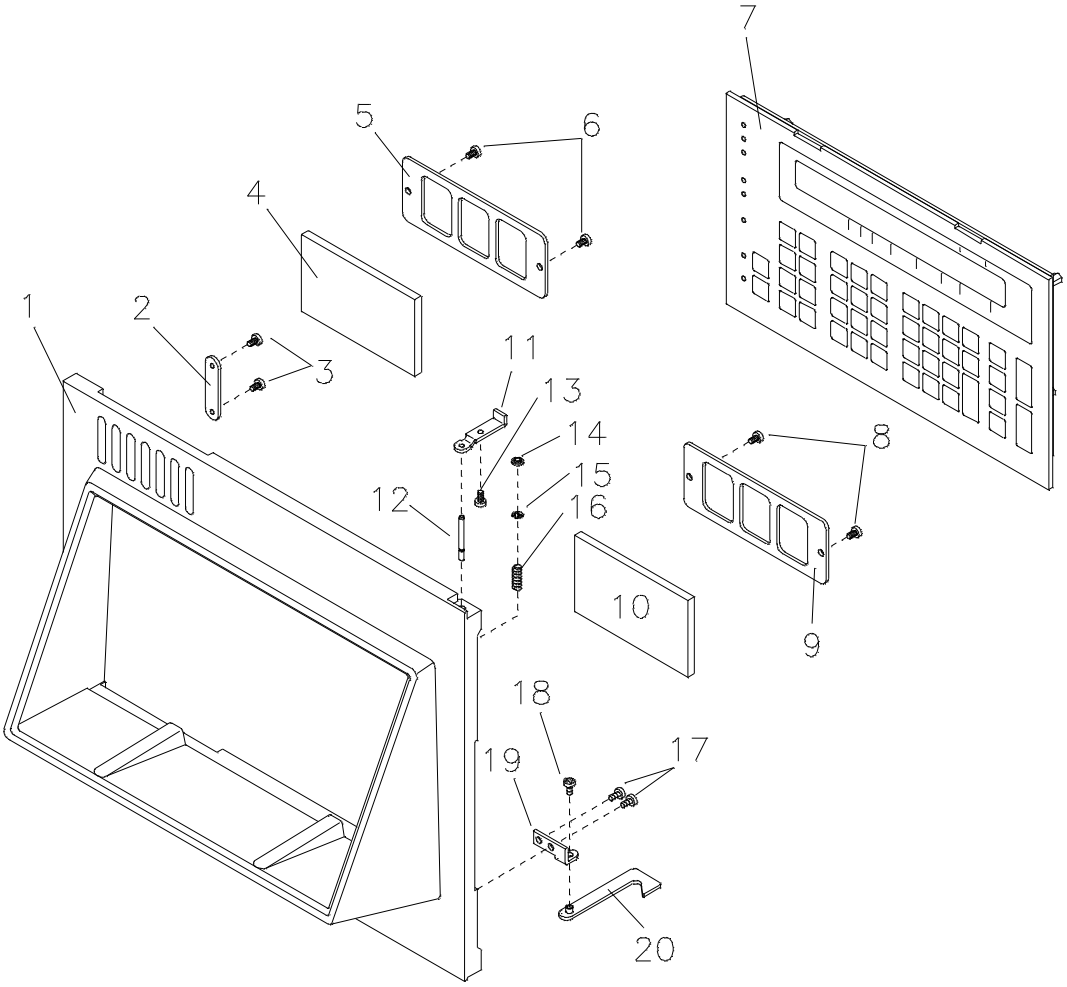

Figure 175 **LUSI Parts**

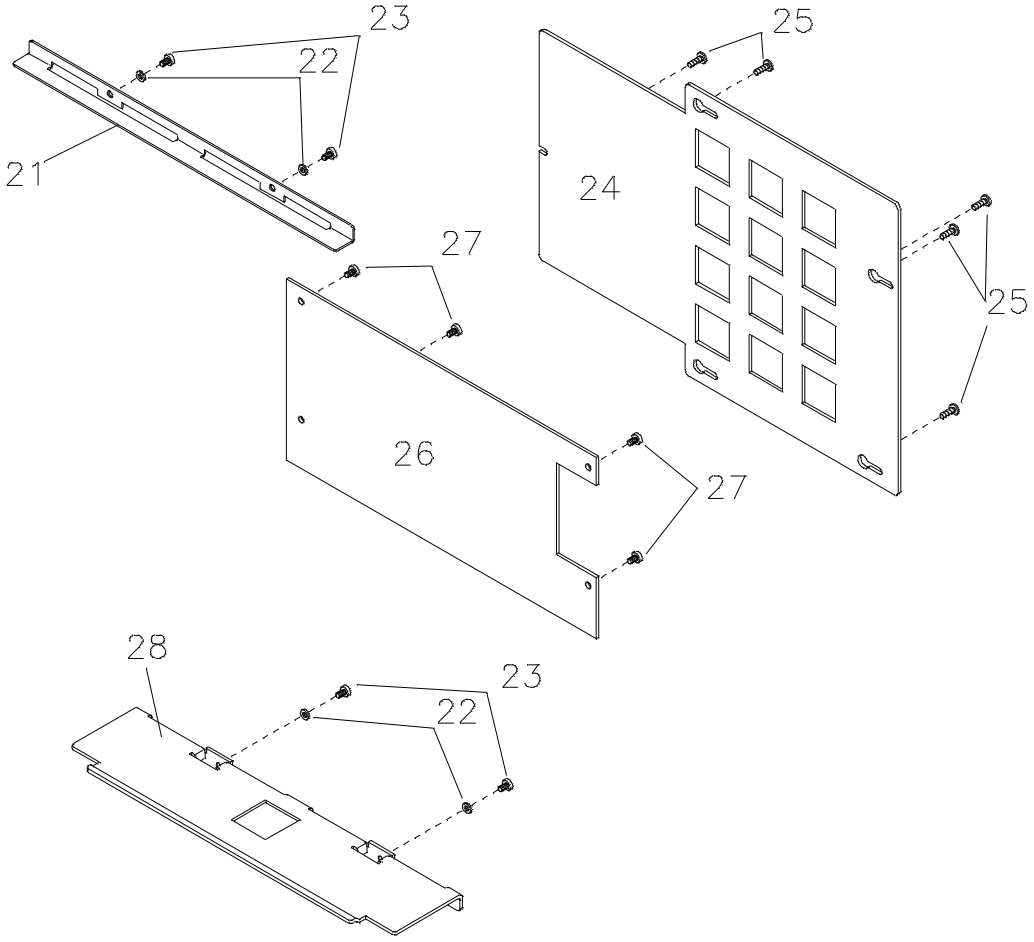

Upgrade LUSI to ChemStation (GPIB)

The parts listed below are required to upgrade from LUSI to ChemStation (GPIB).

Table 56 **LUSI to GPIB Upgrade Parts**

Description	Part number
GPIB Panel	01090-00202
LIB - COM cable	01090-61621
LIB Board (series 1)	01090-66529
LIB Board (series 2)	01090-66579
Screw M3 x 0.5, 8 mm lg	0515-0897
Screw M3 x 0.5, 6 mm lg	0515-0886
Cable GPIB	5061-3352

NOTE For connection of a FPD to ChemStation you need an A/D converter.

System Conversion

Table 57 **System Conversion Parts**

Description	Part number
C1 for 120V - 10 µF/220 V	0160-5713
C1 for 240V - 3 µF/400 V	0160-5712
High Pressure Pump (Booster Pump) 120 V/60 Hz	79835-60012/-69009
High Pressure Pump (Booster Pump) 240 V/50 Hz	79835-60011/-69004
Gear High Pressure Pump 50 Hz	79835-43615
Gear High Pressure Pump 60 Hz	79835-43616
Line Filter 220 V	9135-0038
Line Filter 110 V	9135-0202
Fuse 4 A - Rear of 1090 (220 V)	2110-0055
Fuse 8 A - Rear of 1090 (110 V)	2110-0342

For Power Cables see “Power Cables” on page 359.

Power Supply (PWR)

Table 58 **Power Supply Parts**

Description	Part number
Extender Board for PSC and PWS *	01090-66540
Power Supply Board (PWS)	01090-66522/-69522
Fuse, 2 A	2110-0303
Fuse, 8 A	2110-0342
Power Supply Control Board (PSC)	01090-66523/-69523
Fuse, 2 A	2110-0303
Fuse, 5 A	2110-0030
Power Supply Motherboard (PSM, includes C53)	01090-66524
C53, 40 mF/75 V (rev. A PSM)	0180-1931
C53, 22 mF/75 V (rev. B PSM)	0180-1929
Primary Board PRI (AC fan)	01090-66525
Primary Board PRI (DC fan)	01090-66555
Oven Interface Board (OVI)	01090-66508
Screw M4 x 0.7, 10 mm lg for PSW and PSC	0515-1114
Screw M3 for Heat exchanger on PWS and PSC	0515-1111
Main Transformer	01090-61103
Power Switch	no longer available
Line Filter 110/120 V	9135-0202
Line Filter 220/240 V	9135-0038
Fuse F1 and F2, 110/120V, 8 A	2110-0342
Fuse F1 and F2, 220/240 V, 4 A	2110-0055

Table 58 **Power Supply Parts**

Description	Part number
C1, 110/120 V (rear panel)	0160-5713
C1, 220/240 V (rear panel)	0160-5712
Power Switch Cable (J3)	01090-61606
Oven Primary Cable (J2)	01090-61607
Fan Primary Cable (AC fan only (J5)	01090-61608
Pump Primary Cable (J4)	01090-61609

* Enables access to test points.

Table 59 **Power Cables**

Description	Part number
UK and Eire	8120-8705
Australia and New Zealand	8120-1369
Europe	8120-1689
USA and Canada (115 V)	8120-1378
USA and Canada (240 V)	8120-0698
Switzerland	8120-2104
Denmark	8120-3997
South Africa and India	8120-4211
Japan	8120-4753

Solvent Delivery System (DR5)

Electrical Parts

Table 60 **Electrical Parts**

Description	Part number
SDM Solvent Delivery Motherboard (6 slots)	79835-66511
SMO Solvent Delivery Motherboard (3 slots)	79835-66522
MCD Metering Channel Driver Board	79835-66521
Fuse F15 0.75 A for MCD	2110-0360
IOC Input/Output Connector Board	79835-66512
BCT BUS Connector Ternary	79835-66543
SIC Connector Board	79835-66520
MCD Kit, contains MCD and SIC	79835-68722
MPL Metering Pump Limit Board	79835-66515
PSS Pump Stroke Sensor Board	79835-66517
Sensor for Injector, SDS, Detectors	5061-3356
Bracket for Leak Sensors	79835-02308

Helium Inlet

Table 61 Helium Inlet Parts

Item	Description	Part number
	Helium Inlet Assembly *	01090-67601
1	Screw	01090-22403
2	Adapter Screw	01090-23203
3	Helium Adapter	01090-23205
4	Box, Gas	01090-25501
5	Nut	01090-25701
6	Connector Restrictor	01090-87601
7	Connector	0100-1175
8	Valve Helium	0101-0564
9	Tape Teflon	0460-0016
10	Screw M5, 6 mm lg	0515-1510
11	Gasket	0905-0363
12	O-ring	0905-0682
13	Gasket	0905-0821
14	Washer-Lock	2190-0056
15	Filter Fluid	3150-0942
16	Teflon Tubing Flexible 3 mm (re-oder 5 m)	5062-2461
17	Tubing Flexible	0890-1145

* Includes items 1 to 17.

Figure 176 **Helium Inlet Parts**

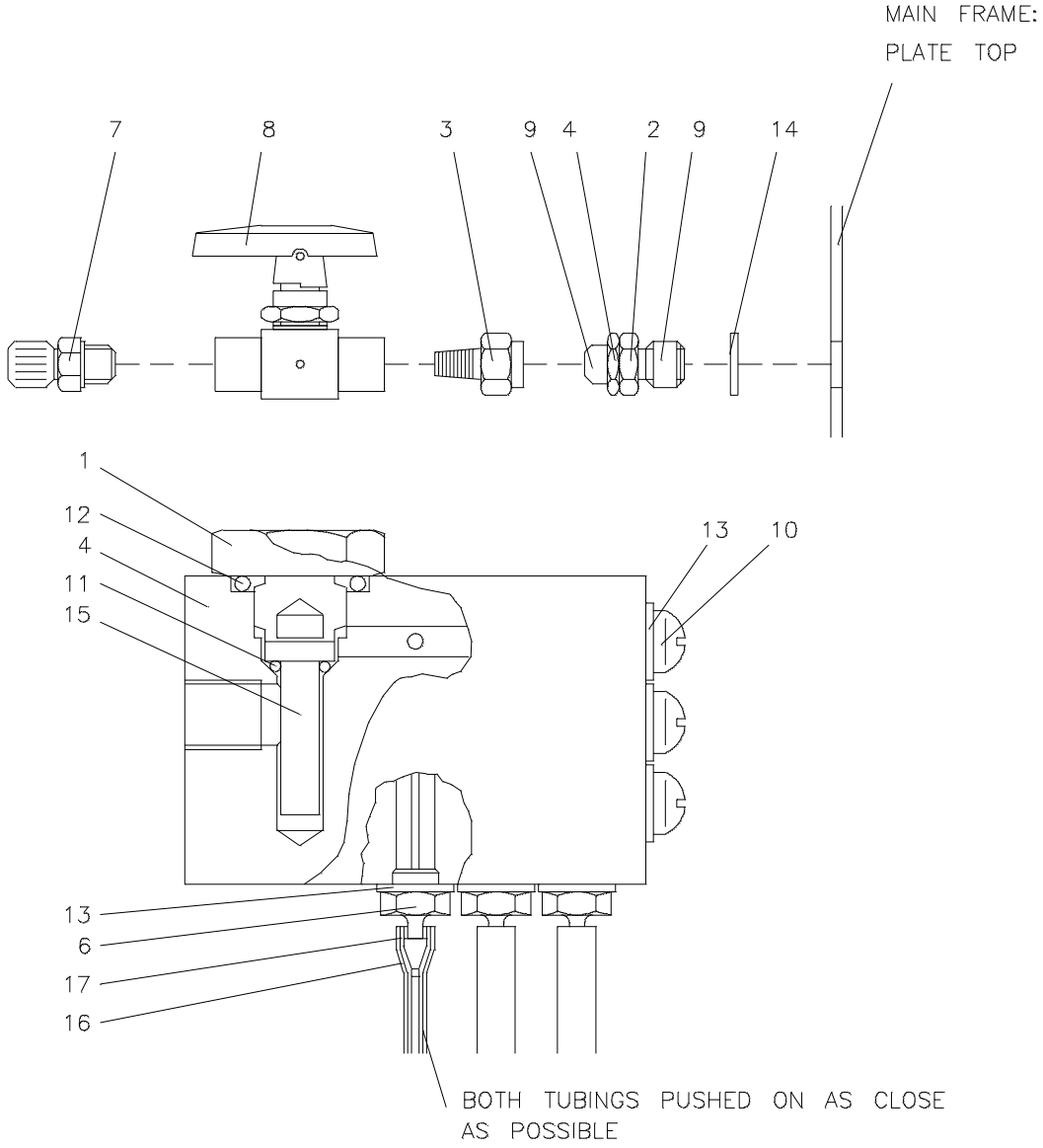

Helium Outlet

Table 62 Helium Outlet Parts

Item	Description	Part number
	Helium Outlet Assembly	01090-67602
1	Angle	01090-00507
2	Bushing Exit	01090-21702
3	Screw Tubing	01090-22404
4	Ring Valve	01090-22501
5	Pin Valve	01090-26105
6	Connector	0100-1175
7	Grommet Rubber	0400-0002
8,9	Tubing Flexible green (re-order 3.6 m)	5021-7127
10,11	Tubing Flexible 3 mm	0890-1145
12,13	Teflon Tubing Flexible 3 mm (re-oder 5 m)	5062-2461
14	Washer	5041-2152
15	Spring Compression	1460-1633
16	Gasket	5041-2112

Figure 177 **Helium Outlet Parts**

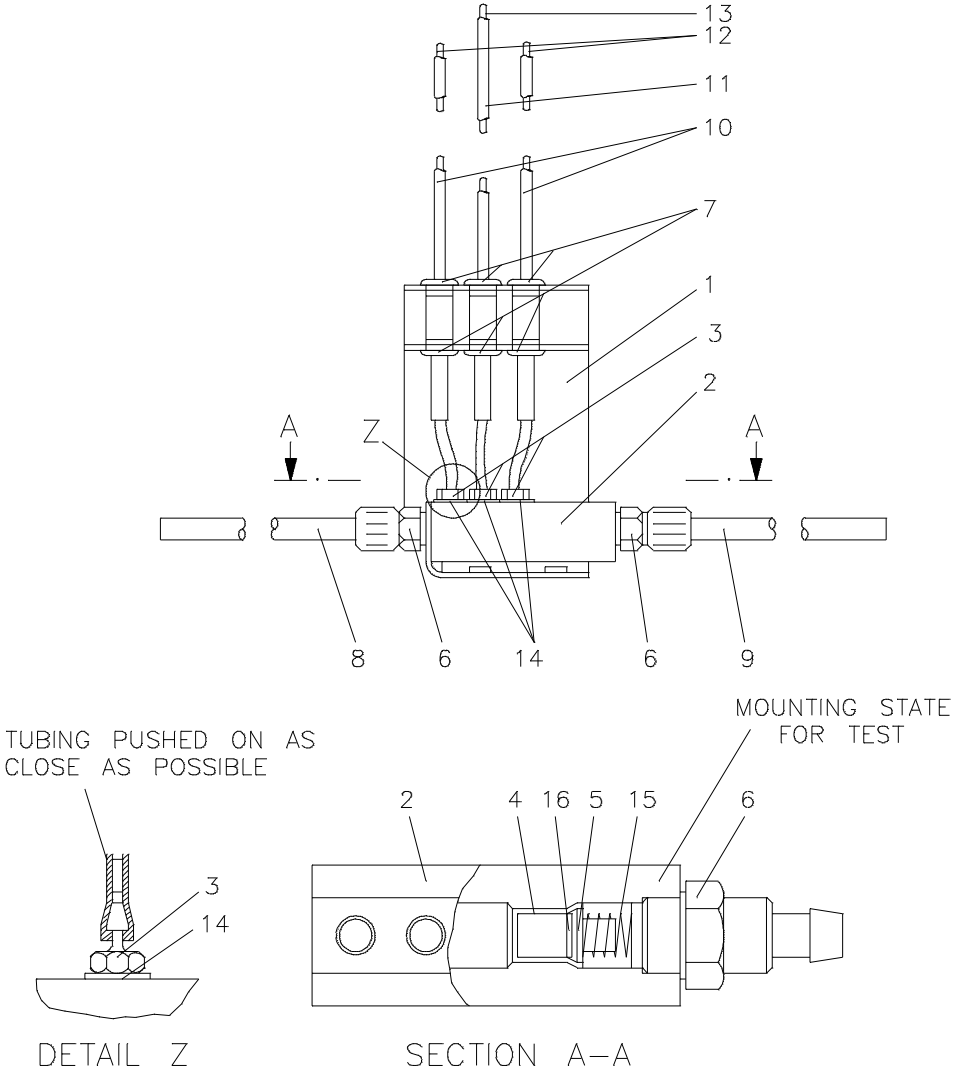

Metering Pump and Rotary Valve

Table 63 **Metering Pump and Rotary Valve Parts**

Item	Description	Part number
	Metering pump **without rotary valve**	79835-60020/-69020
	Metering pump **with rotary valve**	79835-60030/-69010
1	Coupler	1500-0647
2	Coupler	1500-0648
3	Seal, pack of 4	5062-2494
	Seal for use with buffered solvents	0905-1194
4	Thumb screw	5021-1840
5	Plunger Guide	79835-43101
	Screw M2.5 x 0.45, 6 mm lg for plunger guide	0515-0894
6	Spring	1460-1998
7	Head Assembly *	79835-68101
	Screw M4 x 0.7, 6 mm lg for head fixing (metal housing)	0515-0050
	Head Thumb Screw (plastic housing)	5021-1840
8	Sapphire Plunger	3980-0672
	Ball Bearing for plunger	1410-0075
9	Rotary Valve	79835-60021/-69021
10	Wiper for opto sensor	79835-44801
	Plastic cover for metering pump	79835-44103

* Complete assembly. Consists of items 3, 6, 7 and 8.

Figure 178 **Metering Pump and Rotary Valve Parts**

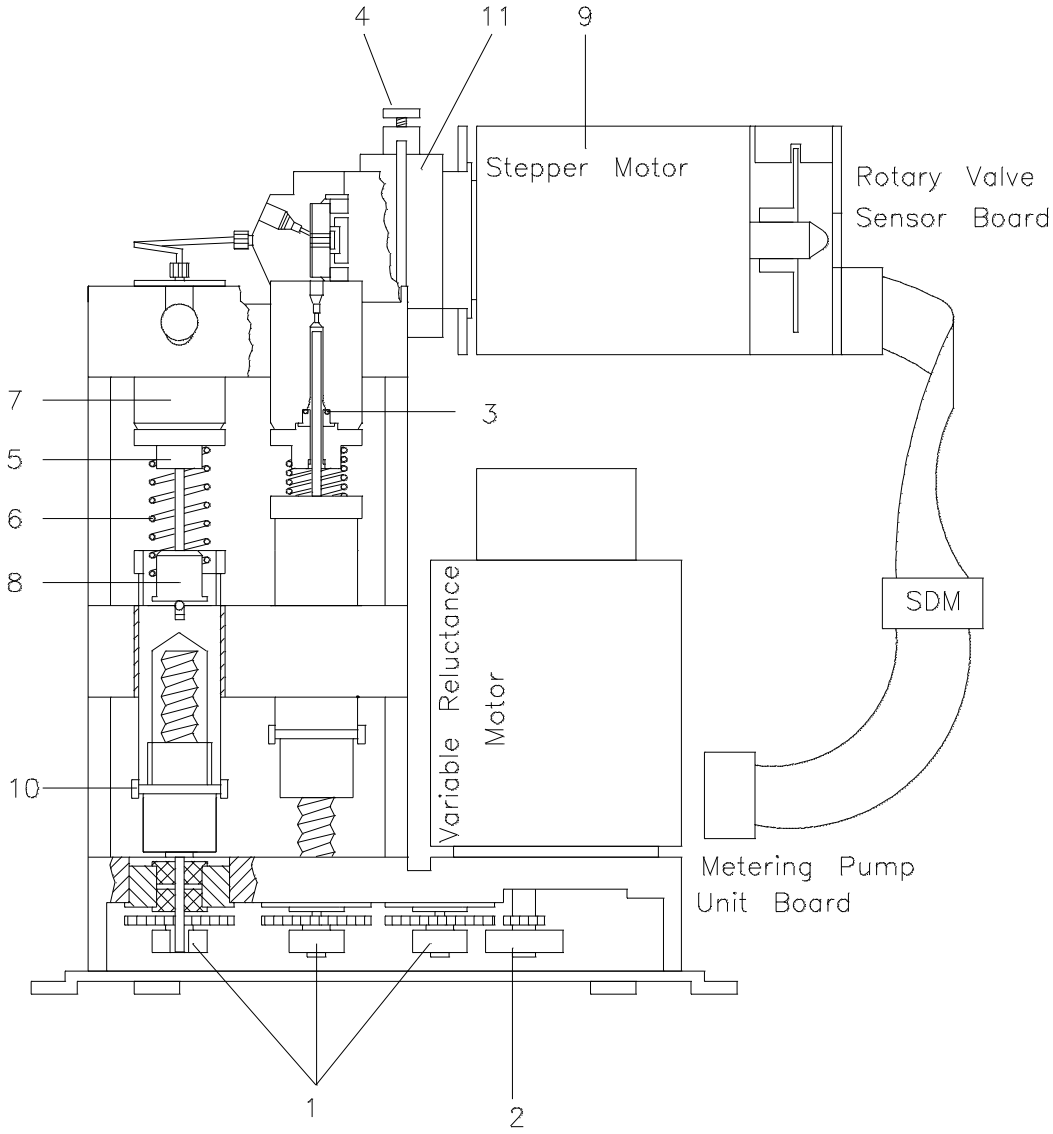

High Pressure Pump

Table 64 **High Pressure Pump Parts**

Item	Description	Part number
	High Pressure Pump Assembly 230 V 50 Hz	79835-60011/-69004
	Pump Motor 230 V 50 Hz	3140-0682
	Gear 50 Hz	5041-2101
	High Pressure Pump Assembly 115 V 60 Hz	79835-60012/-69009
	Pump Motor 115 V 60 Hz	5041-0683
	Gear 60 Hz	5041-2102
	Hex set screw for 50 and 60 Hz Gear	0515-0761
	Belt Gear Driver (on motor shaft)	79835-43613
	Belt Gear 1/2 inch	1500-0668
	Belt Lubricant	79841-65501
1	PSS Board	79835-66517
	Screw M3 x 0.5, 6 mm lg	0515-0886
2	Cable Clamp	1400-0053
3	Plastic Shield	79835-00611
	Screws M4, 6 mm lg for shield	0515-0898
4	Cover for Oil Reservoir	79835-24111
	Gasket for Oil reservoir	0905-0998
	Cap Holding Screw M4, 40 mm lg	0515-0850
	Gasket for Cap Holding Screw	0905-0720
	Label-Warning	7120-6153
5	Pump Body	79835-27716
6	Oil Inlet Valve	79835-67103
7	Diaphragm	79835-04123
8	Pump Head	79835-27717

Table 64 **High Pressure Pump Parts**

Item	Description	Part number
	Screw M6 for Pump Head	0515-0502
	Grease for Pump Head Screws	79846-65501
	Torque Wrench (for pump head screws)	8710-1158
	5 mm Hex Key (for pump head screws)	8710-1936
9	Valve Housing	79835-25211
	Valve Cartridge	79835-67101
	Valve Cartridge, up to pH 12.5	79835-67102
	Sieve	79835-65213
	Sieve, up to pH 12.5	79835-65216
10	Override Valve	79835-61111
	Override Valve (350 bar)	79835-61112
11	Override Tubing	79835-67311
12	Reservoir Tubing	79835-67312
13	Screw M4 x0.7, 10 mm lg	0515-1114
14	Screw M4, 35 mm lg	0515-0092
15	Screw M4, 75 mm lg	0515-0827
	Washer M4 for item 14 and 15	3050-0893
16	Screw M4	0515-0048
	Washer M4	2190-0586
	Oil	01010-80002

Figure 179 **High Pressure Pump Parts**

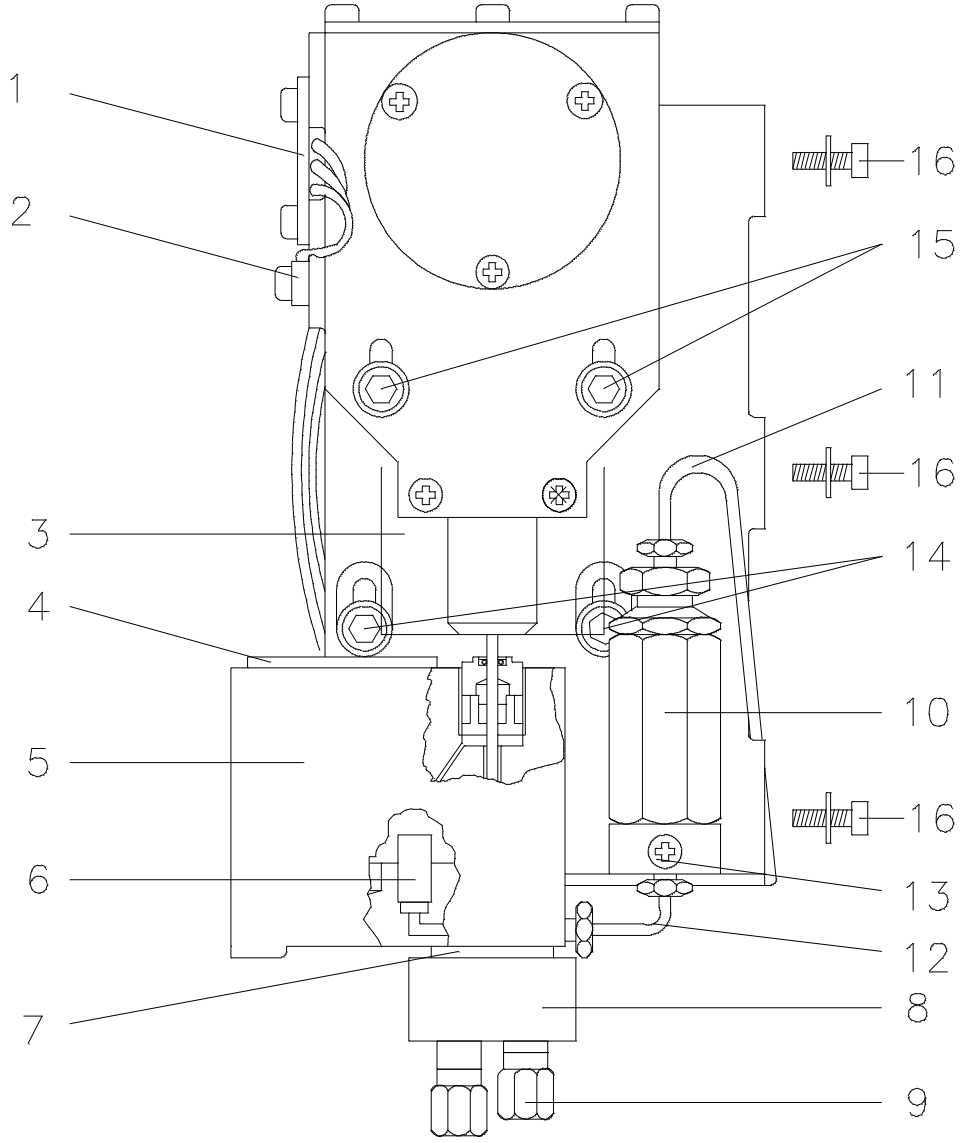

Solvent Flow Path

Table 65 **Solvent Flow Path Parts**

Item	Description	Part number
1	SDS Capillary 0.25 mm i.d., 700 mm lg	79846-87602
2	Low Pressure Compliance	79835-60003/-69003
3	Delivery Tube C 0.6 mm i.d., 430 mm lg	79835-67306
4	Metering Pump + valve, see “Metering Pump and Rotary Valve” on page 365	
5	Delivery Tube B 0.6 mm i.d., 500mm lg	79835-67305
6	Delivery Tube A 0.6 mm i.d., 600 mm lg	79835-67302
7	Connection Capillary 0.6 mm i.d., 90 mm lg	79835-67304
8	Connection Capillary 0.6 mm i.d., 90 mm lg	79835-67303
9	Connection Capillary 0.9 mm i.d., 290 mm lg	01090-87603
10	Bottle Connector	01090-87602
	O-Ring (KALREZ™)	0905-1259
11	Gasket	0905-0821
12	Screw Tubing	01090-22404
13	Teflon Tubing Flexible 3 mm (re-oder 5 m)	5062-2461
14	Bottle Capillary 0.9 mm i.d., 190 mm lg	01090-87606
15	Solvent Inlet Filter	01090-60008
16	Teflon tubing and glass frit	01090-60009
	He Glas Frit (without teflon tubing) 10 - 16 µm	5041-8339
	Frit Adapater	5021-1868
	Filter Kit (Consists of items 15 and 16)	01090-82701
17	Bottle 1000 ml	9301-0656
18	Low Pressure Tube 0.6 mm i.d., 140 mm lg	79835-67307

Table 65 **Solvent Flow Path Parts**

Item	Description	Part number
19	High Pressure Pump, see “High Pressure Pump” on page 367	
20	Capillary 0.25 mm i.d., 130 mm lg	79835-67308
21	High Pressure Damper	79835-60005
22	Loop Capillary 25 µl, 0.6 mm i.d., 1100 mm lg	79846-87604
	Loop Capillary 125 µl, 0.9 mm i.d., 1390 mm lg	79846-87612
	Loop Capillary 250 µl, 0.9 mm i.d., 2700 mm lg	79846-87613
23	ZDV-Union	0100-0900
24	Needle Insert 25 µl	79846-87201
	Needle Insert 250 µl	79846-87202
25	Needle Seat	79846-67101
26	Detector Cell (see FPD or DAD section)	
27	Outlet, Body	01090-27705
28	Flush Connection Capillary 0.6 mm i.d., 190 mm lg	01090-87615
29	Screw Tubing	01090-22404
30	Teflon Tubing Flexible 3 mm (re-oder 5 m)	5062-2461
31	Flexible Tubing 6 mm o.d.	0890-1486
32	Seal Flush	01090-27103
33	Body Flush, SST	01090-27704
34	Set Screw M4	no part number
35	ZDV-Union	0100-0900
36	Union 1/16 SST	0100-1017
37	Flush Waste Capillary 0.6 mm i.d., 590 mm lg	01090-87608
38	Flush Detector Capillary 0.6 mm i.d., 1000 mm lg	01090-87609

Table 65 **Solvent Flow Path Parts**

Item	Description	Part number
39	Waste Tube Assembly 4.6 mm i.d., 300 mm lg	79846-87301
	Fitting M10 (2x)	0100-0771
40	Waste Sump	79846-44501
41	Union 1/16 SST	0100-1017
42	Waste Capillary 0.6 mm i.d., 120 mm lg	79846-87610
43	Detector Capillary 0.6 mm i.d., 90 mm lg	79846-87609
44	Flush Valve	79846-67902
45	Flush Valve T Capillary 0.6 mm i.d., 50 mm lg	79846-87607
46	Waste Tube 200 mm lg	79846-27303
47	Tube 180 mm lg	79846-27305
48	Restriction Capillary 0.17 mm i.d., 500 mm lg	79846-87600
49	T-Union	0100-1016
50	Outlet Capillary 0.29 mm i.d., 430 mm lg	01090-87614
51	ZDV Union	0100-0900
52	Column Adapter 0.12, 110 mm lg	01090-87611
	Column Adapter 0.17, 130 mm lg	01090-87305
	Column Adapter 0.12, 280 mm lg	01090-87610
	Column Adapter 0.17, 280 mm lg	01090-87304
53	Column	
54	Column Adapter, see item 52	
55	ZDV-Union	0100-0900
56	Capillary Unheated CC 0.12 mm i.d., 370 mm lg	01090-87301
	Capillary Unheated CC 0.17 mm i.d., 370 mm lg	01090-87317
57	Valve T Capillary 90 mm lg	79846-87606
58	Heating Assembly	01090-61105

Table 65 **Solvent Flow Path Parts**

Item	Description	Part number
59	Seat Capillary 0.12 mm i.d., 110 mm lg	79846-87605
	Seat Capillary 0.17 mm i.d., 110 mm lg	01090-87303
60	Waste Tube 200 mm lg	79846-27303
61	Syringe Capillary 0.25 mm i.d., 110 mm lg	79846-87601
62	Waste Sleeve 25 µl	79846-24501
	Waste Sleeve 250 µl	79846-24502
63	Metering Device	79846-60002
	Syringe 25 µl	9301-0633
	Syringe 250 µl	9301-0678
64	Valve Unit	79846-60001/-69001

Figure 180 **Solvent Flow Parts**

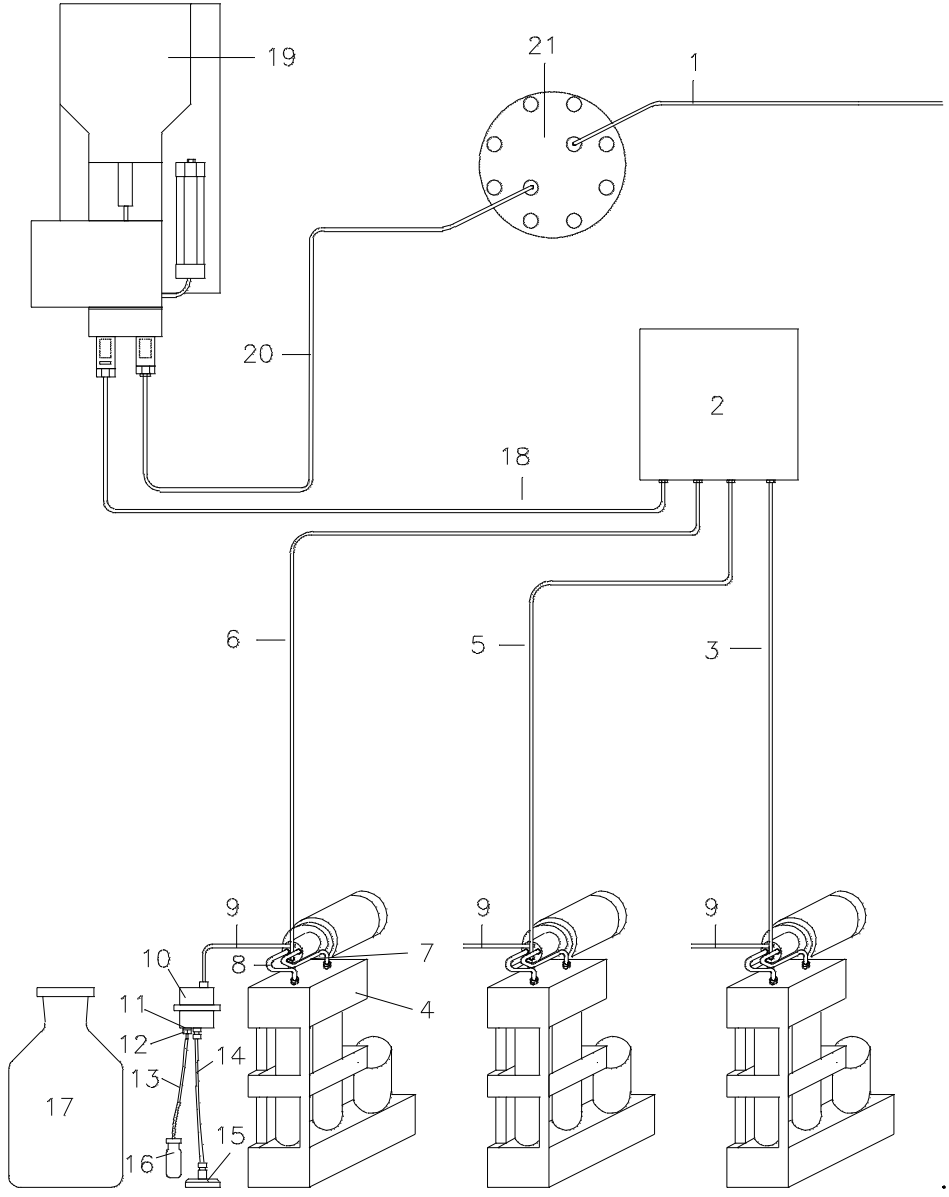

Figure 181 **Solvent Flow Parts**

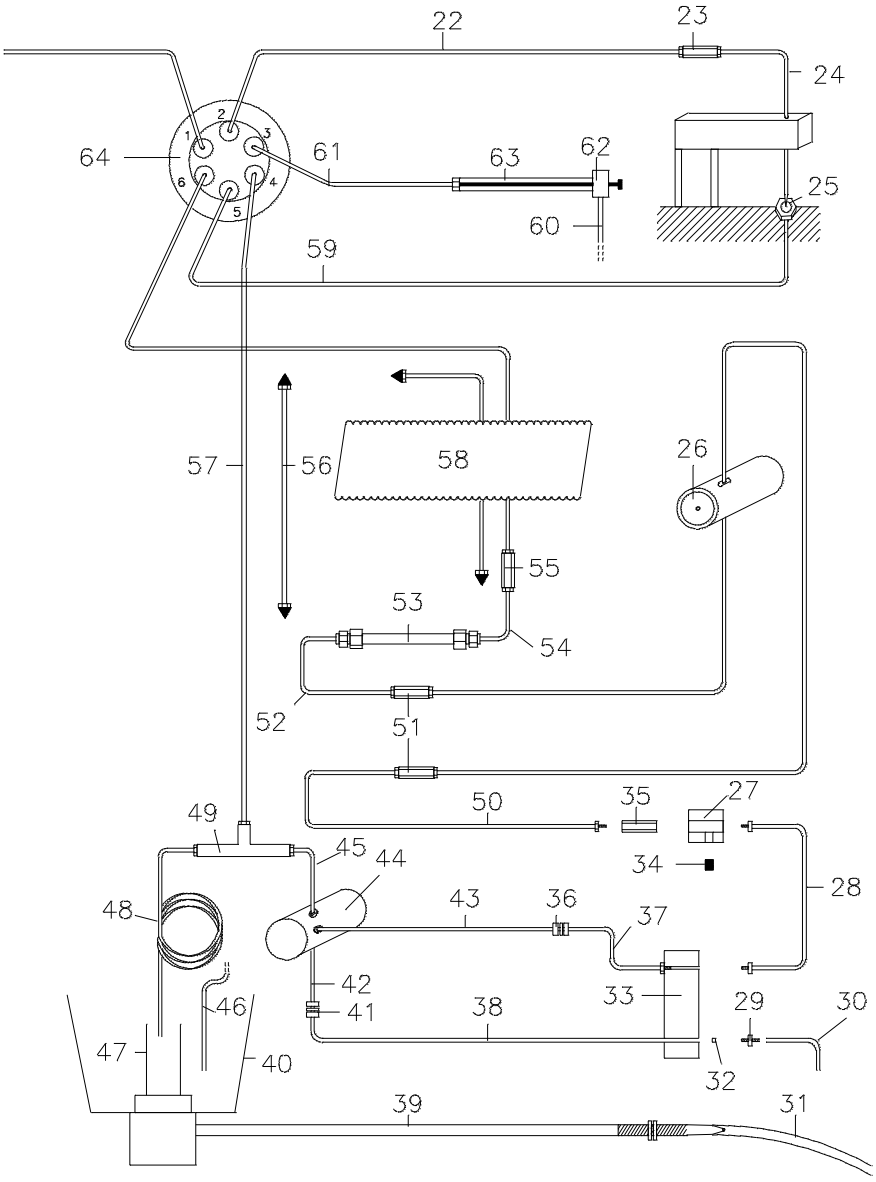

Solvent Delivery System (PV5)

Electrical Parts

Table 66 **Electrical Parts**

Description	Part number
Valve Driver Board (CVD)	79835-66534
Fuse F11 on CVD, 0.375 A	2110-0421

MCGV Parts

Table 67 **MCGV Parts**

Item	Description	Part number
1	Capillary Outlet 0.6 mm i.d., 195 mm lg	79835-87631
2	Screw M4, 40 mm lg	0515-0850
3	MCGV Assembly	79835-67701/-69701
	MCGV Kit [1]	79835-68721
4	Flexible PTFE Tubing 0.26 m [2]	5021-7117
5	Screw-Tube [2]	79835-23231
6	Tube-Screw [2]	5041-2163
7	Bushing [2]	79835-21734
8	Valve Bracket	79835-01231
9	Gear Box Cover	79835-04102
10	Bumper Foot	0403-0282
11	Screw M2.5 x 0.45, 6 mm lg	0515-0894
12	Nut [2]	79835-25731

1: Only required when replacing an old proportioning valve with a new MCGV.
2: These parts are in the Capillary Valve Kit 79835-87632.

Figure 182 **MCGV Parts**

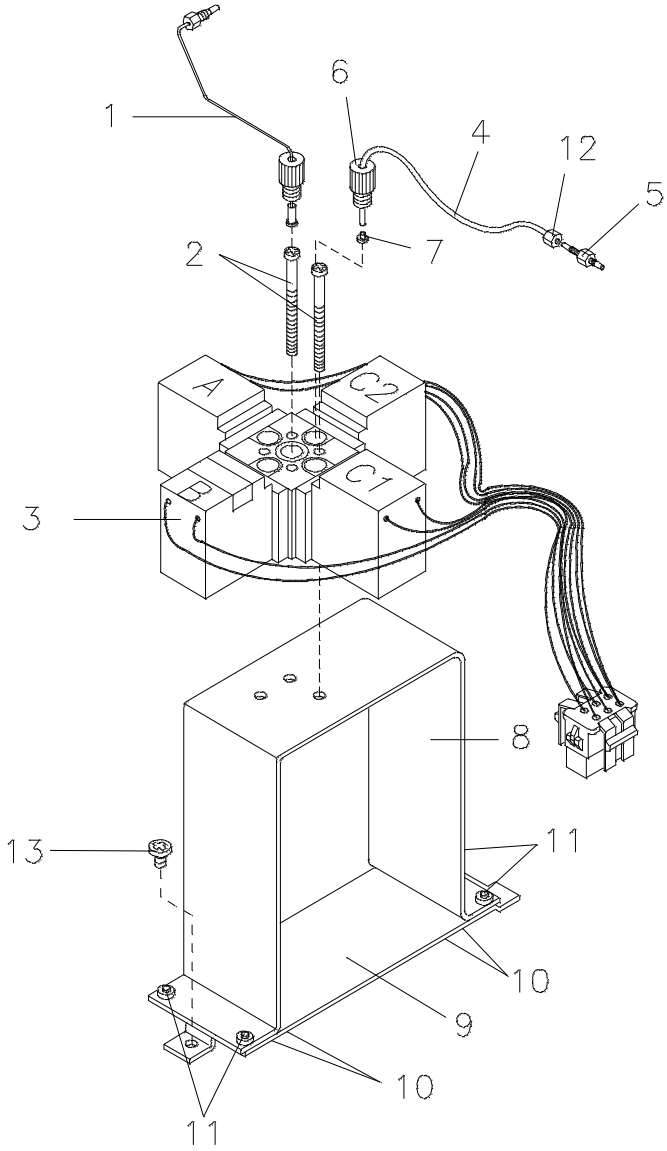

Channel C2/D External Connections

Channel C2 (Series 1 only)

Table 68 **Channel C2 Parts (Series 1 only)**

Item	Description	Part number
1	Union holder	79835-22330
2	ZDV Union	0100-0900
3	Setscrew	0515-0761
4	Nut	01040-25701

Figure 183 **Channel C2 Parts (Series 1 only)**

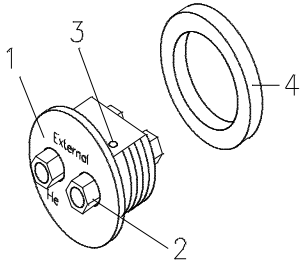

Channel C2/D (Series 2 only)

Table 69 **Channel C2/D Parts (Series 2 only)**

Item	Description	Part number
1	Tube Screw	01090-22404
2	Adapter Screw	79846-23203
3	Set Screw	0515-0761
4	Nut	01040-25701

Table 69 **Channel C2/D Parts (Series 2 only)**

Item	Description	Part number
5	Waste Funnel	01090-00101
6	Union Holder	01090-22313
7	Helium Telefon Tubing	5021-7117
8	Inlet Capillary 1.6 mm i.d., 260 mm lg	79835-87632
	Solvent Tray	01090-44410
	Bottle Tub	01090-44501
	Bottle Head Assy [1]	01090-60006
	Washer	5041-2152
	Gasket	0905-0821
	Solvent Bottle	9301-0656
	Helium Restrictor	01090-87601

1. Includes solvent filter, He frit and all tubings.

Figure 184 **Channel C2/D Parts (Series 2 only)**

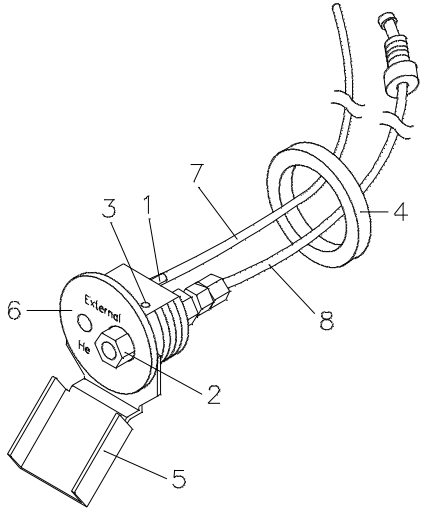

Mixer Parts

Table 70 **Mixer Parts**

Item	Description	Part number
1	Static Mixer	79835-87330
2	Capillary (mixer inlet) 0.25 mm i.d., 320 mm lg	79835-87638
3	Holder mixer	79835-02330
4	Shield leak	79835-00630
5	Screw M3 x 0.5, 6 mm lg	0515-0886
6	Screw M3 x 0.5, 6 mm lg	0515-0886
	Mixer Installation Kit [1]	01090-68704

1: Contains items 2, 3, 4, 5, and 6.

Figure 185 **Mixer Parts**

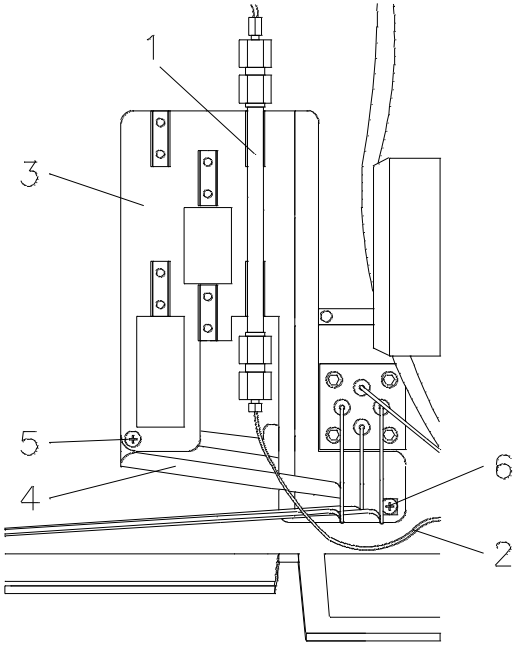

PV5 Solvent Flow Parts

Table 71 **PV5 Solvent Flow Parts**

Item	Description	Part number
1	SDS Capillary 0.25 mm i.d., 700 mm lg	79846-87602
2	Static Mixer	79835-87330
3	Low Pressure Compliance	79835-60003/-69003
4	Delivery Tube A 0.6 mm i.d., 600 mm lg	79835-67302
5	MCGV, see “MCGV Parts” on page 377	
6	Inlet Capillary Teflon Tubing 260 mm lg	79835-87632
7	Bottle Connector	01090-87602
	O-Ring (KALREZ™)	0905-1259
8	Gasket	0905-0821
9	Screw Tubing	01090-22404
10	Teflon Tubing Flexible 3 mm (re-oder 5 m)	5062-2461
11	Solvent Inlet Filter	01090-60008
12	Teflon tubing and glass frit	01090-60009
	He Glas Frit (without teflon tubing) 10 - 16 µm	5041-8339
	Frit Adapater	5021-1868
	Filter Kit (Consists of items 11 and 12)	01090-82701
13	Solvent Filter (external channel only) [1]	01018-60025
14	Bottle 1000 ml	9301-0656
15	Bottle Head Assembly [2]	01090-60006
16	External Connector, see “Channel C2/D External Connections” on page 379	
17	Metering Pump + Rotary Valve, see “Metering Pump and Rotary Valve” on page 365	
18	Connection Capillary 0.6 mm i.d., 90 mm lg	79835-67304

Table 71 **PV5 Solvent Flow Parts**

Item	Description	Part number
19	Connection Capillary 0.6 mm i.d., 90 mm lg	79835-67303
20	Capillary Outlet 0.6 mm i.d., 195 mm lg	79835-87631
21	Low Pressure Tube 0.6 mm i.d., 140 mm lg	79835-67307
22	Capillary 0.25 mm i.d., 130 mm lg	79835-67308
23	High Pressure Pump see “High Pressure Pump” on page 367	
24	High Pressure Damper	79835-60005
25	Capillary (mixer inlet) 0.25 mm i.d., 320 mm lg	79835-87638

1: For use with item 15.
2. Includes solvent filter, He frit and all tubings.

NOTE For additional part numbers of the solvent flow path, refer to section “Solvent Delivery System (DR5)” on page 360.

Figure 186 **PV5 Solvent Flow Parts**

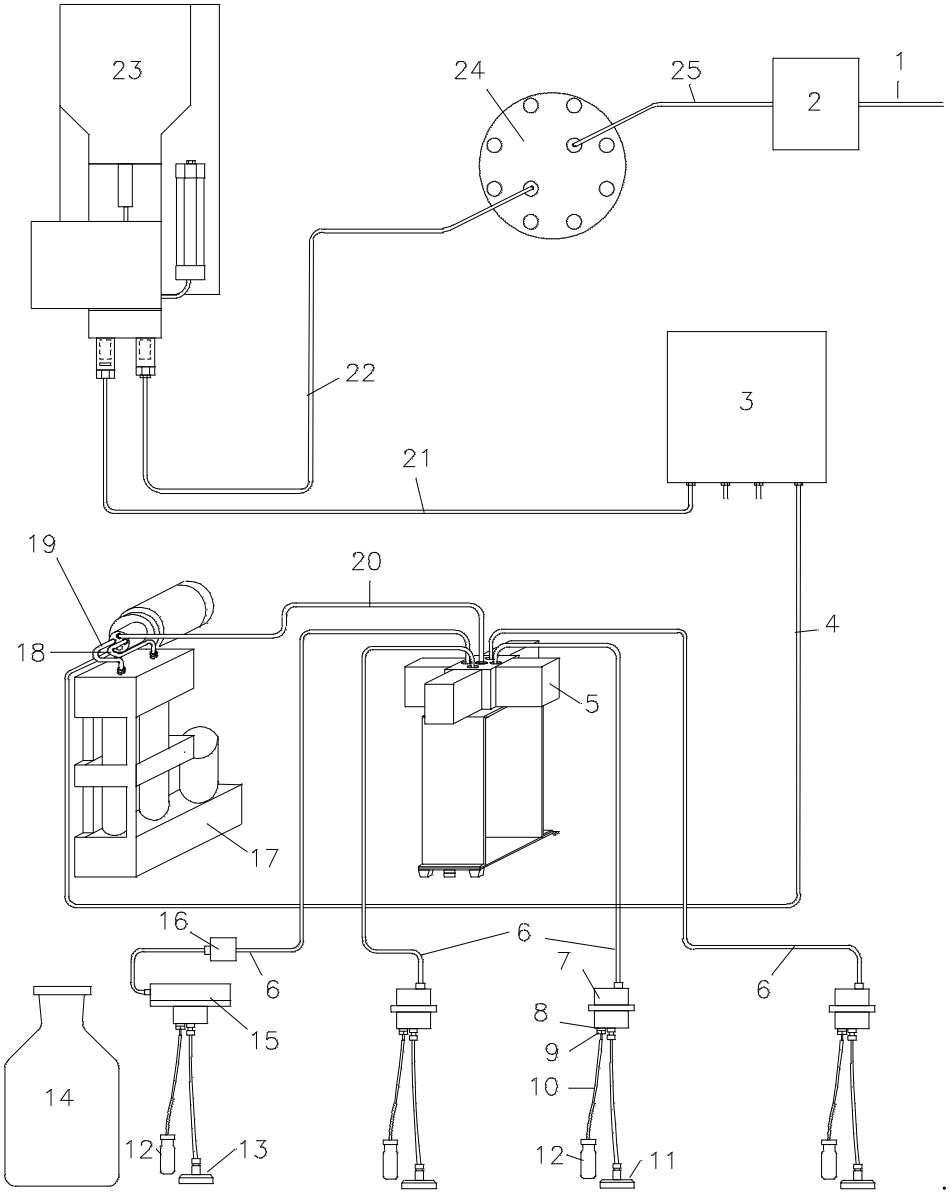

Manual Injector (MI)

Figure 187 **Injector Module Parts**

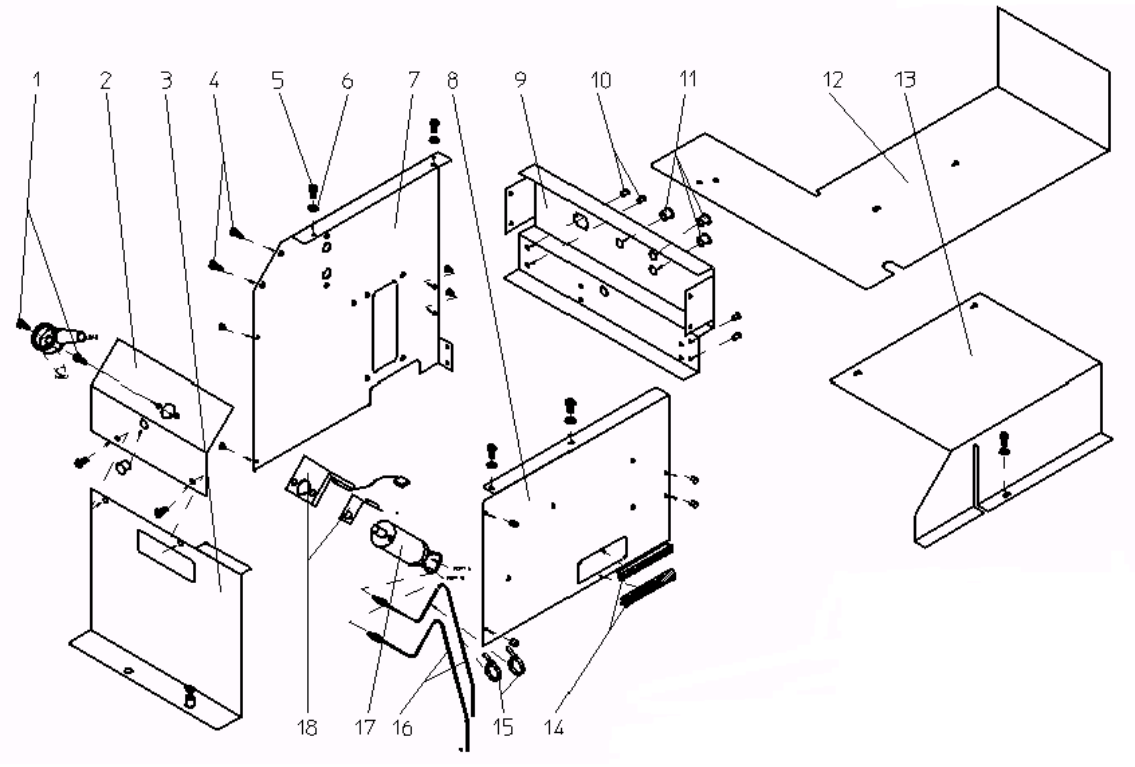

Injector Module

Table 72 **Injector Module Parts**

Item	Description	Part number
1	Screw 8-32 .375-in-lg pan	2510-0045
2	Panel Front Series 2	01090-00220
3	Bracket	
4	Screw M4 x 0.7, 6 mm lg	0515-0898
5	Screw M3 x0.5, 10 mm lg	0515-0886
6	Washer M3	3050-0891
7	Panel Left Series 2	
8	Panel Right Series 2	
9	Panel	
10	Rivet blind	
11	Plug hole	6960-0016
12	Panel Bottom Series 2	01090-04139
13	Panel Top Series 2	01090-04138
14	Grommet	
15	Cable Strap	
16	Vent Capillary 0.6 mm i.d., 360 mm lg	01090-87616
17	Sample Injection Valve - Rheodyne 7125	0101-0607
18	Position Sensor *	01090-61617

* Includes cable, sensor, magnet, and mounting brackets

Rheodyne™ Model 7125 Parts

Table 73 **Rheodyne™ Model 7125 Parts**

Item	Description	Part number
	Rheodyne™ Model 7125 (5 µl sample loop)	0101-0607
	Position Sensor [1]	01090-61617
	Rotor seal	0100-0623
	Rotor seal - high pH	0100-0620
	5 µl sample loop	1535-4860
	10 µl sample loop	0101-0376
	20 µl sample loop	0101-0377
	50 µl sample loop	0101-0378
	100 µl sample loop	0101-0379
	200 µl sample loop	0101-1252
	500 µl sample loop	0101-1251
	1 ml sample loop	0101-1219
	2 ml sample loop	0101-1250
	5 ml sample loop	0101-1249
	10 µl syringe removeable needle	5182-9725
	25 µl syringe removeable needle	5182-9719
	50 µl syringe removeable needle	5182-4538
	100 µl syringe removeable needle	5182-4539
	2550 µl syringe removeable needle	5182-9720

1. Includes cable, sensor, magnet, and mounting brackets

Rheodyne™ Model 7413 Parts

Table 74 **Rheodyne™ Model 7413 Parts**

Item	Description	Part number
	Rheodyne™ Model 7413	no longer available
	Position Sensor [1]	01090-61617
	Isolation seal (7010-010)	1535-4046
	Bearing ring (7010-006)	1535-4859
	Stator screw (7410-041)	
	Stator screw (7010-016)	1535-4857
	Rotor seal Vespel (7413-013)	1535-4861
	for syringes see “RheodyneTM Model 7125 Parts” on page 387	

1. Includes cable, sensor, magnet, and mounting brackets

Automatic Injector (AI)

Table 75 **Autoinjector Parts**

Item	Description	Part Number
A	Metering Unit, see “Metering Unit Parts” on page 394	
B	Actuator Bridge, see “Actuator Bridge Parts” on page 398	
C	Needle Unit, see “Needle Arm Unit Parts” on page 396	
1	Cover Plate Valve (left) *Series 1*	01090-04124
	Cover Plate Valve (left) *Series 2*	01090-04137
2	Black Knob/Guide	01090-23101
3	Retainer	0510-0684
4	Screw M3 x 0.5, 6 mm lg	0515-0886
5	Washer	3050-0520
6	Cover Plate Syringe (right) *Series 1*	79847-04103
	Cover Plate Syringe (right) *Series 2*	79847-04109
7	Screw M4 x 0.7, 10 mm lg	0515-1114
8	PLS Cable	79846-61601
9	Nut M10	0100-0771
10	Waste Tube	79846-87301
11	Waste Screw	79846-22403
12	Nut	0535-0042
13	Leak Sensor	5061-3356
14	Screw M3 x 0.5, 6 mm lg	0515-0886
15	Tube	79846-27305
16	Sealing Rope	0905-0712
17	Waste Sump	79846-44501

Table 75 **Autoinjector Parts**

Item	Description	Part Number
18	Screw M3 x 0.5, 10 mm lg	0515-1105
19	Screw M5 x 0.7, 6 mm lg	0515-1510
20	Bracket Actuator	79846-01206
21	Screw M5 x 0.7, 6 mm lg	0515-1510
22	Valve and Actuator Assembly Includes items 20, 21, 23	79846-60001/-69001
	Rotor Seal Vespel	1535-4048
	Rotor Seal high PH	1535-4900
23	Light Switch Board (Valve Sensor Board)	79846-66504
24	Cover	79846-01207
25	Screw M3 x 0.5, 10 mm lg	0515-1105
26	Restriction Capillary 0.17 i.d., 500 mm lg	79846-87600
27	Valve-T-Capillary	79846-87606
28	Flush Valve	79846-67902
29	Detector Capillary 0.6 mm i.d., 90 mm lg includes items 35, 36	79846-87609
30	Waste Capillary 0.6 mm i.d., 120 mm lg includes items 35, 36	79846-87610
	Union, for connecting items 29 and 30 to detector and waste lines	0100-1017
31	Flush Valve T Capillary 0.6 mm i.d., 50 mm lg includes items 35, 36	79846-87607
32	T-Union	0100-1016
33	Connector	0100-1175
34	Muffler pneumatic	0100-1176
35	Screw, Fitting	0515-0836
36	Fitting, Valve	0100-1182

Table 75 **Autoinjector Parts**

Item	Description	Part Number
37	Cover Switch Assembly	79846-67903
38	Switch	3101-0617
39	Adapter Air Damper	79846-23202
40	Fitting	0100-1047
41	Tubing Flexible green (re-order 3.6 m)	5021-7127
42, 43	Screw M4 x 0.7, 6 mm lg	0515-0898
44	ICO Board	79846-66501
45	Swivel Unit, includes items 46, 48, 49	79846-60005
46	Stepper Motor	3140-0675
47	Screw M4 x 0.7, 6 mm lg	0515-0898
48	Light Switch Board (Swivel Arm Sensor Board)	79846-66503
49	Interrupter	79846-48103
	Extender Cable	01090-67610

Figure 188 **Autoinjector Parts**

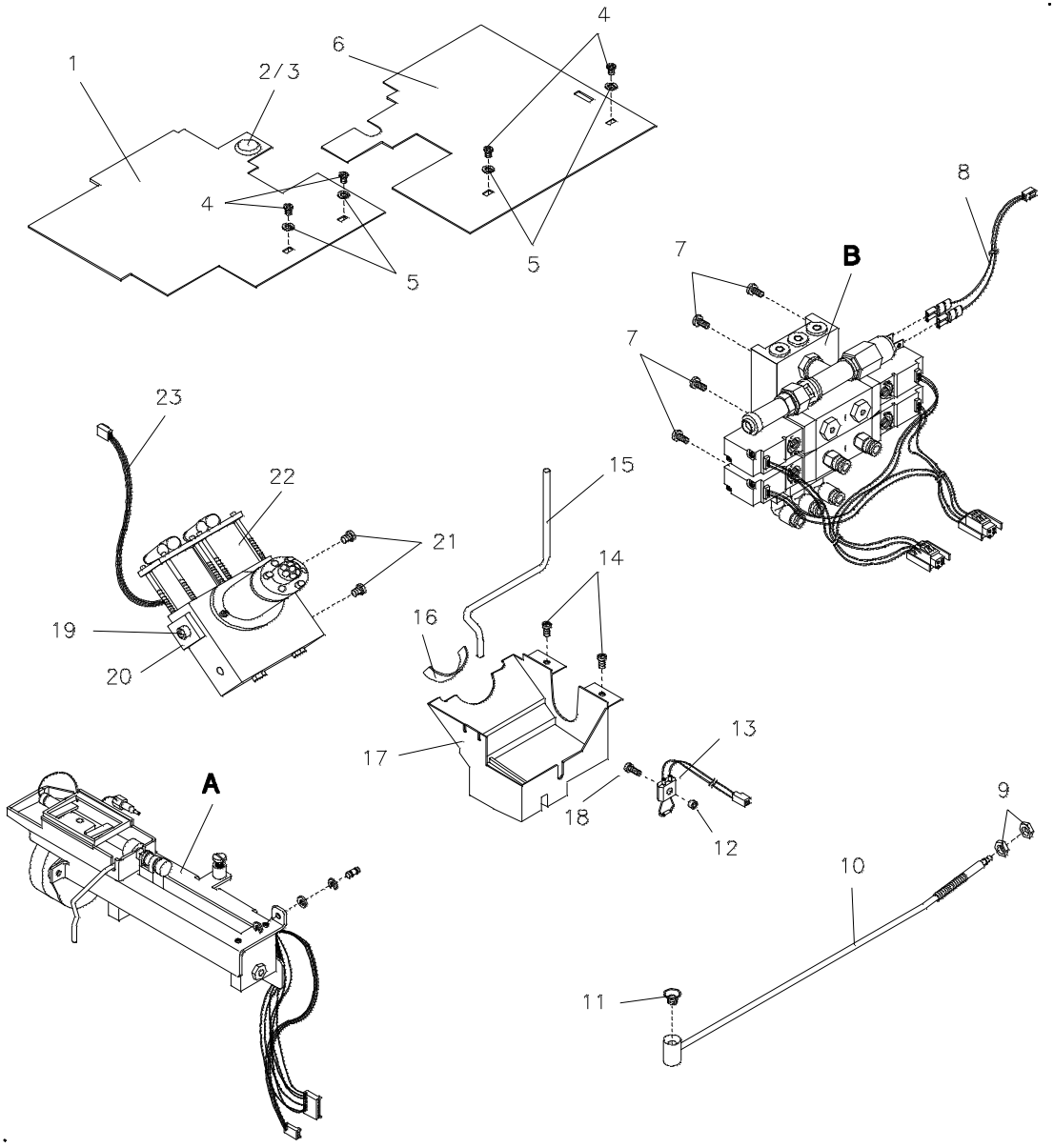

Figure 189 **Autoinjector Parts**

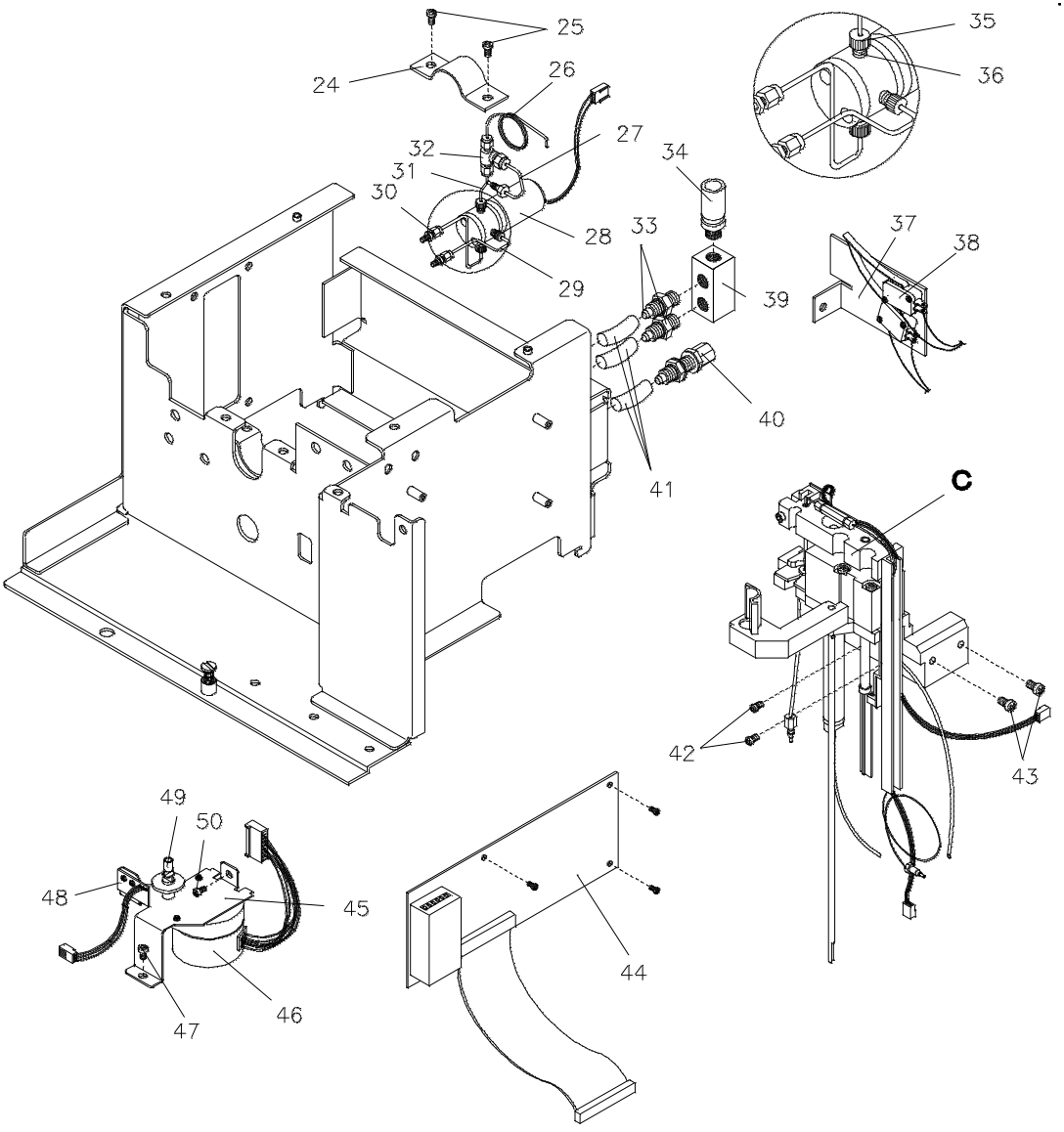

Metering Unit Parts

Table 76 **Metering Unit Parts**

Item	Description	Part number
1	Metering Base Assembly, excluding items 2 to 19.	79846-68101
2	Cover	79846-44101
3	Seal 25 µl	79846-27101
	Seal 250 µl	79846-27103
4	Syringe 25 µl, includes item 7, 25 µl	9301-0633
	Syringe 250 µl, includes item 7, 250 µl	9301-0678
5	O-ring	0905-0970
6	Waste Tray 25 µl	79846-24501
	Waste Tray 250 µl	79846-24502
7	Plunger 25 µl	9301-0675
	Plunger 250 µl	9301-0677
8	Waste Tube	79846-27303
9	Syringe Motor	79846-67901
10	Coupler	1500-0495
11	Bushing	79846-21701
12	Screw M3 x 0.5, 6 mm lg	0515-0886
13	Washer M3	3050-0891
14	Light Swich Board	79846-66502
16	Knurled Screw M3, replaces items 15, 16, 17	5021-1863
	Nut M3 for item 16	0535-0112
18	Hand Screw	79846-22405
19	Screw M3 - 18 mm lg	0515-0786
20	Leak Tray	79846-44701
	Slide	79846-43101

Table 76 **Metering Unit Parts**

Item	Description	Part number
	Spring Compression	1460-1980

Figure 190 **Metering Unit Parts**

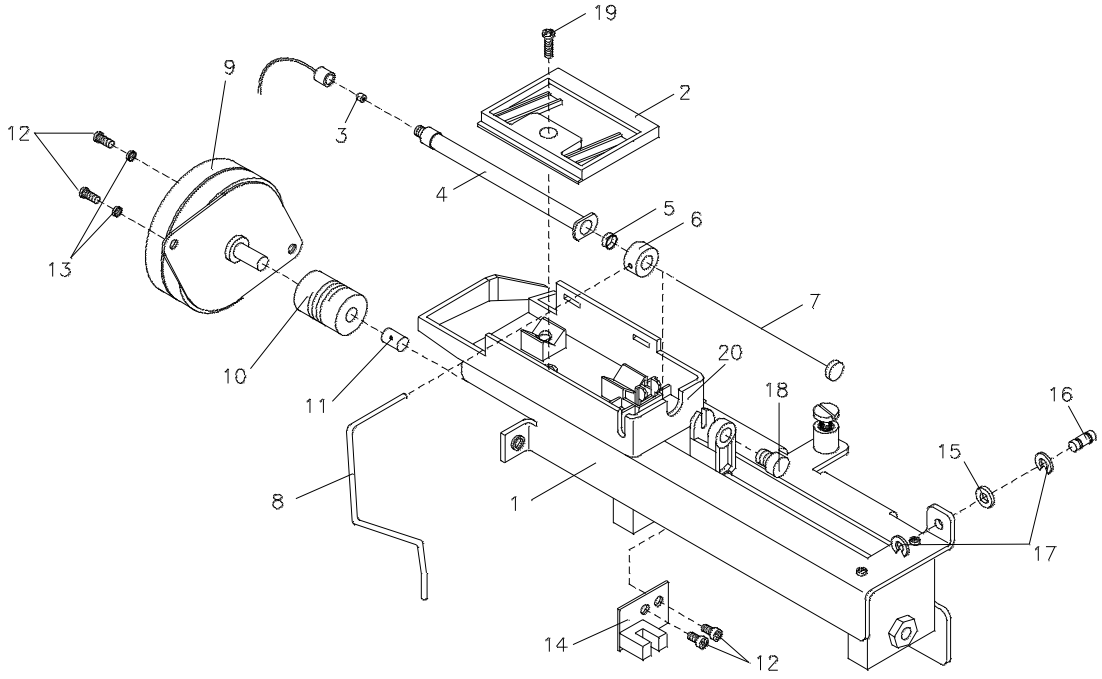

Needle Arm Unit Parts

Table 77 **Needle Arm Unit Parts**

Item	Description	Part number
1	Swivel Arm	79846-45001
2	Needle 25 µl	79846-87201
	Needle 250 µl	79846-87202
3	Swivel Arm Bar	79846-23702
4	Pin	79846-26102
5	Bottle in Position Sensor Board	79846-66505
	Seat Capillary 0.17 mm i.d., 110 mm lg	01090-87303
6	ZDV Union (for 125 and 250 µl loop)	0100-0900
7	Loop Capillary 25 µl, 0.6 mm i.d., 1100 mm lg	79846-87604
	Loop Capillary 125 µl, 0.9 mm i.d., 1390 mm lg	79846-87612
	Loop Capillary 250 µl, 0.9 mm i.d., 2700 mm lg	79846-87613
8	Screw M4 x 0.7, 40 mm lg	0515-1669
9	Screw M3 x 0.5, 6 mm lg	0515-0886
10	Needle Arm Assembly, includes items 11, 12, 23	79846-67103
11	Screw M4 x 0.7, 20 mm lg	0515-0175
12	Spacer	79846-44702
13	Spring	1460-1993
14	Nut M3	0535-0112
15	Bracket	79846-01205
16	Screw M3 x 0.5, 6 mm lg	0515-0886
17	Screw M3 x 0.5, 6 mm lg	0515-0773
18	Screw knurled	5021-1863
19	Bar	79846-22705
20	Screw M3 x 0.5, 6 mm lg	0515-0886

Table 77 **Needle Arm Unit Parts**

Item	Description	Part number
21	Needle Arm Sensor Board	79846-66503
22	Screw knurled	5021-1863
23	Air Cylinder - old version (SERVICE NOTE 01090-118)	79846-67103
	Air Cylinder - new version	0101-0733
24	Socket Holder Assembly	79846-65201
25	Screw M3 x 0.5, 12 mm lg	0515-1110
26	Seat Capillary 0.12 mm i.d., 110 mm lg	79846-87605
27	Seat Holder Assembly	79846-67102
28	Needle Seat	79846-67101

Figure 191 **Needle Arm Unit Parts**

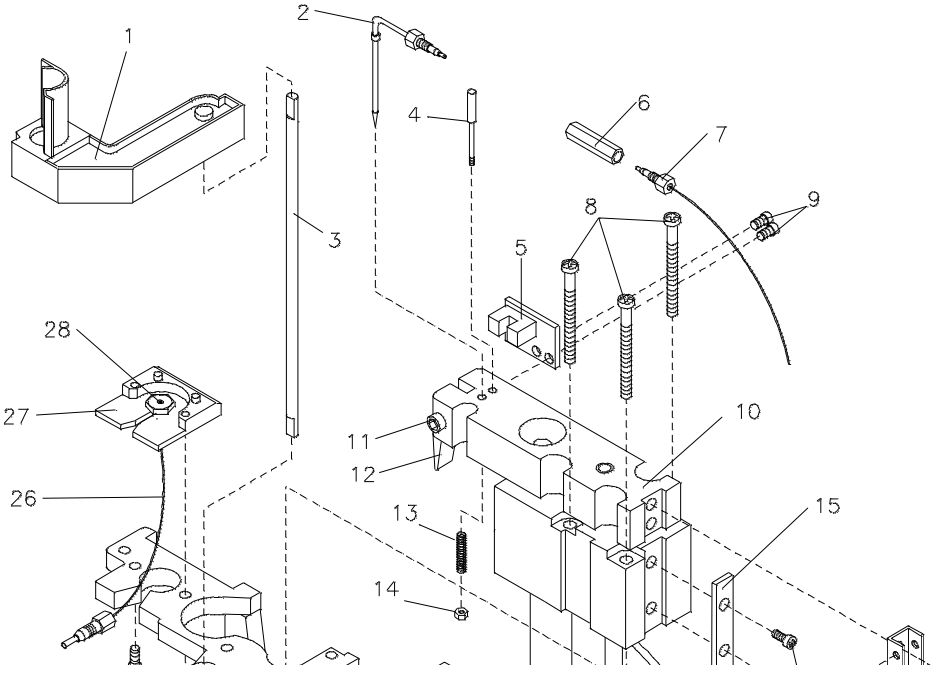

Actuator Bridge Parts

Table 78 **Actuator Bridge Parts**

Item	Description	Part number
	Actuator Bridge Assembly	0101-0558
1	Low Air Pressure Switch 1/4 inch	3107-0018
	Low Air Pressure Switch 1/8 inch	3107-0019
2	Solenoid Valve, excluding items 3, 4, 5 (only for 1090)	0101-0559
3	Gasket	no part number
4	Restrictor Fitting, includes item 3	0100-1401
5	Push-In Fitting Male (blue)	0100-1410
6	Elbow Fitting	0100-1408

Figure 192 **Actuator Bridge Parts**

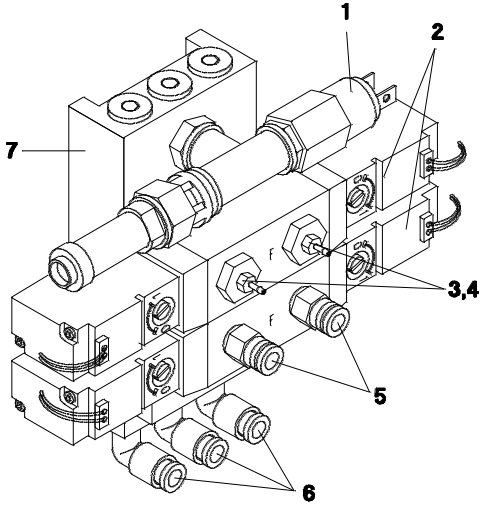

Automated Pre-column Derivatization System Parts

Table 79 **Automated Pre-column Derivatization System Parts**

Item	Description	Part number
1	Micro-oven Assembly	79848-66901/-69901
2	Micro-oven Controller	79848-66902
3	Controller Mounting Plate *Series 1*	79848-04101
	Controller Mounting Plate *Series 2*	79847-04104
4	Remote Control Cable	79848-61610
5	Not-ready Cable	79848-61609
6	Power Supply Cable	79848-61608

Figure 193 **Automated Pre-column Derivatization System Parts**

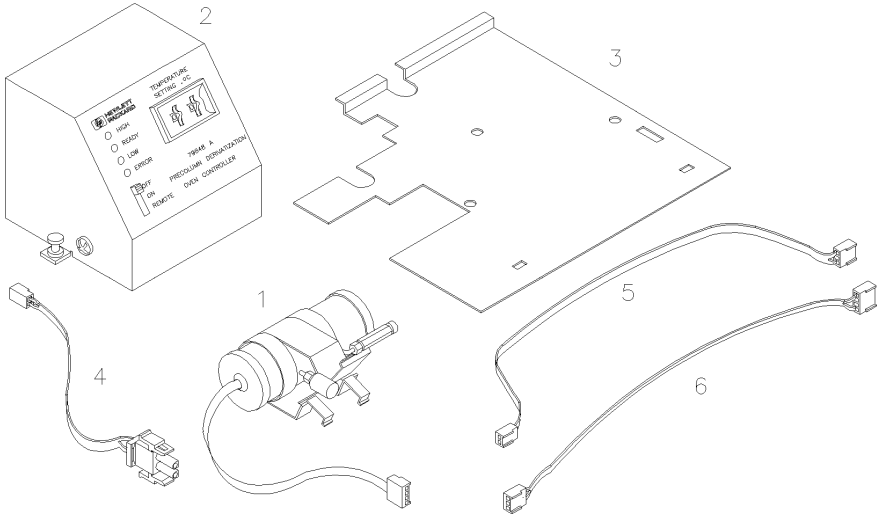

Automatic Sampler (AS)

Table 80 **Automatic Sampler Parts**

Item	Description	Part number
	Complete Autosampler	79847-67700
1	Magazine Assembly	79847-60005
2	Cover, not used in TCAS	79847-04102
3	Screw M3 x0.5, 4 mm lg	0515-1508
4	Screw M3 x0.5, 12 mm lg	0515-1110
5	Holder, Inner Spring	79847-22308
6	Spring	1460-2076
7	Collar	79847-22309
8	Screw M4x0.7, 12 mm lg	0515-1115
9	Washer M4	3050-0893
11	Carriage Rail	79847-48902
12	Carriage Rack	79847-48901
13	Magazine Holder #1	79847-43701
14	Magazine Holder #2	79847-43702
15	Magazine Holder #3	79847-43703
16	Magazine Holder #4	79847-43704
17	Magazine Holder #5	79847-43705
18	Magazine Holder #6	79847-43706
19	Magazine Holder #7	79847-43707
20	Magazine Holder #8	79847-43708
21	Magazine Holder #9	79847-43709
22	Magazine Holder #0	79847-43710

Table 80 **Automatic Sampler Parts**

Item	Description	Part number
23	Pin	1480-0531
24	Gear Belt	1500-0635
25	Nut AS	79847-21702
26	Screw M3 x 0.5, 10 mm lg	0515-1105
27	CPS Lightswitch Board	79847-66502
28	Screw M3 x0.5, 4 mm lg	0515-1508
29	Insert	0380-0003
30	Screw M4 x0.7, 8 mm lg	0515-0153
31	Carriage Motor Assembly, use only Berger-Lahr motors (see “New Stepper Motors” on page 266)	79847-67901
32	MIP Lightswitch	79847-66503
33	Magazine Motor Assembly, use only Berger-Lahr motors (see “New Stepper Motors” on page 266)	79847-67902
34	SCO Board	79847-66501
36	VCS Lightswitch	79847-66504
37	Screw M3 x 0.5, 10 mm lg	0515-1105
38	Insert	0380-0003
39	Screw M3 x 0.5, 6 mm lg	0515-0886
40	Drive Frame	79847-00503
41	Gear Assembly, consists of: Block	79847-21201
	Gear	79847-42502
	Pin	1480-0531
42	Guide Rod	1500-0511
43	Driver	79847-45001

Figure 194 **Automatic Sampler Parts**

Figure 195 **Automatic Sampler Parts**

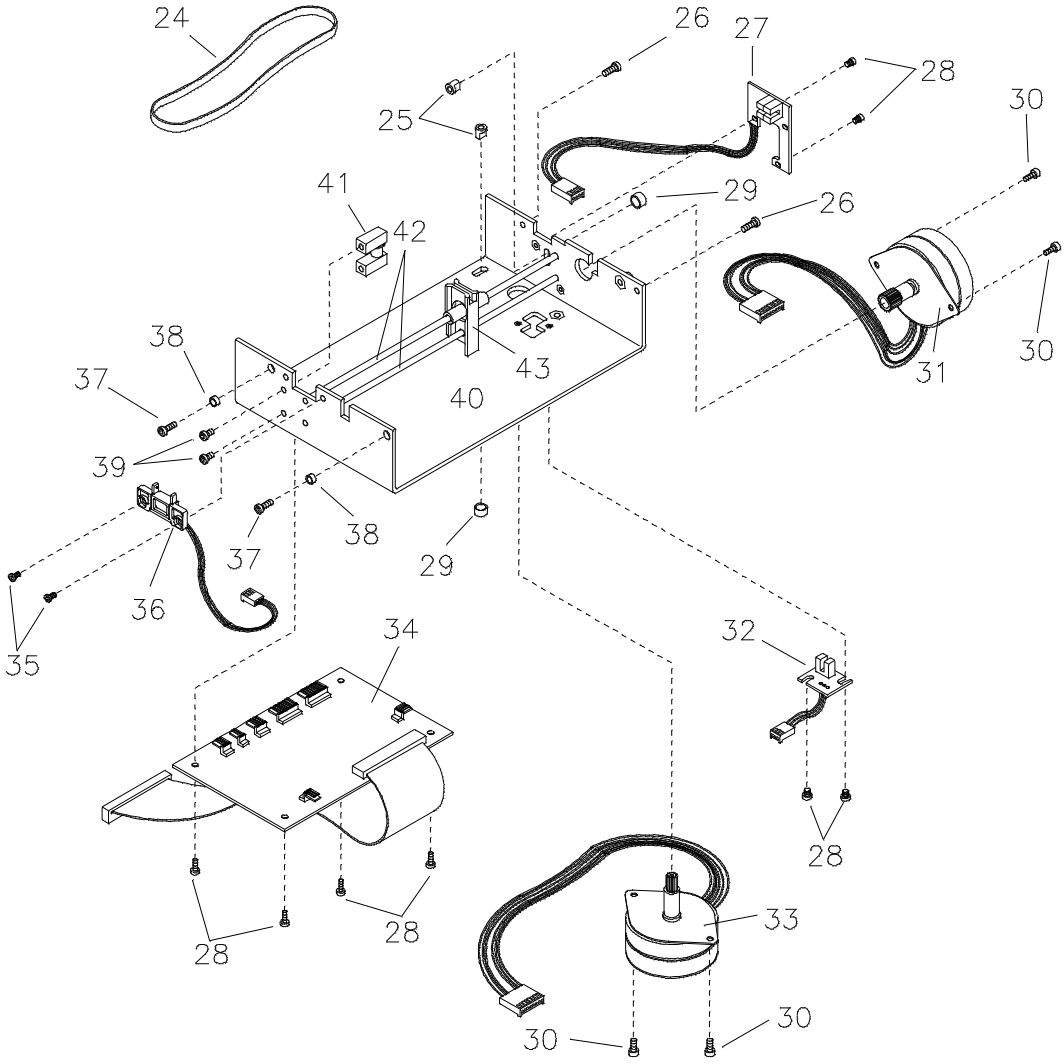

Temperature-controlled Autosampler (TCAS)

Table 81 **Temperature-controlled Autosampler Parts**

Item	Description	Part number
	Fan Assembly	79847-61601
	CPS Lightswitch Board	79847-66510
	MIP Lightswitch Board	79847-66511
	VCS Lightswitch Board	79847-66512
	Carriage Motor Assembly, use only Berger-Lahr motors (see “New Stepper Motors” on page 266)	79847-67901
	Magazine Motor Assembly, use only Berger-Lahr motors (see “New Stepper Motors” on page 266)	79847-67902
	SCO Leak Cover	79847-00601
1	Pipe Insulation	4320-0409
2	Heat Exchanger Unit	79847-05501
	Heat Exchanger Cover	79847-04101
	Heat Exchanger	79847-42001
	Fan	3160-0861
	White plastic fittings for connecting cooling bath tubing	0100-1402
3	Screw M3 x 0.5, 6 mm lg	0515-0886
4	Support Plate	79847-84701
5	Label	
6	Screw M5 x 0.8, 10 mm lg	0515-1117
7	Washer M4	3050-0893
8	Drip Tray	79847-00604
9	Screw M3 x 0.5, 6 mm lg	0515-0886

Table 81 **Temperature-controlled Autosampler Parts**

Item	Description	Part number
10	Cover Valve - Series 1	79847-04104
	Cover Valve - Series 2	79847-04110
11	Cover Syringe - Series 1	79847-04103
	Cover Syringe - Series 2	79847-04109
12	Washer M3	3050-0891
13	Screw M3 x 0.5, 6 mm lg	0515-0886
14	Bottle Extractor	79847-44901
15	Rear Panel	79847-04111
16	Drip Cover	79847-00603
17	Enclosure, includes items 17 and 22	79847-64400
18	Screw M3 x 0.5, 6 mm lg	0515-0886
	Hinge	79847-85102
19	Washer M3	3050-0891
20	Insulation left	79847-45405
21	Insulation right	79847-45403
22	Lid - Series 2, part of item 17	79847-64400
23	Screw M3 x0.5, 12 mm lg	0515-1110
24	Holder, Inner Spring	79847-22308
25	Holder, Outer Spring	79847-22309
26	Spring Cpmression	1460-2076
27	Screw M4x0.7, 10 mm lg	0515-1114
28	Washer M4	3050-0893
29	Drainage	79847-00602
30	Drainage Bottom	79847-00605

Figure 196 Automatic Sampler (TCAS) Parts

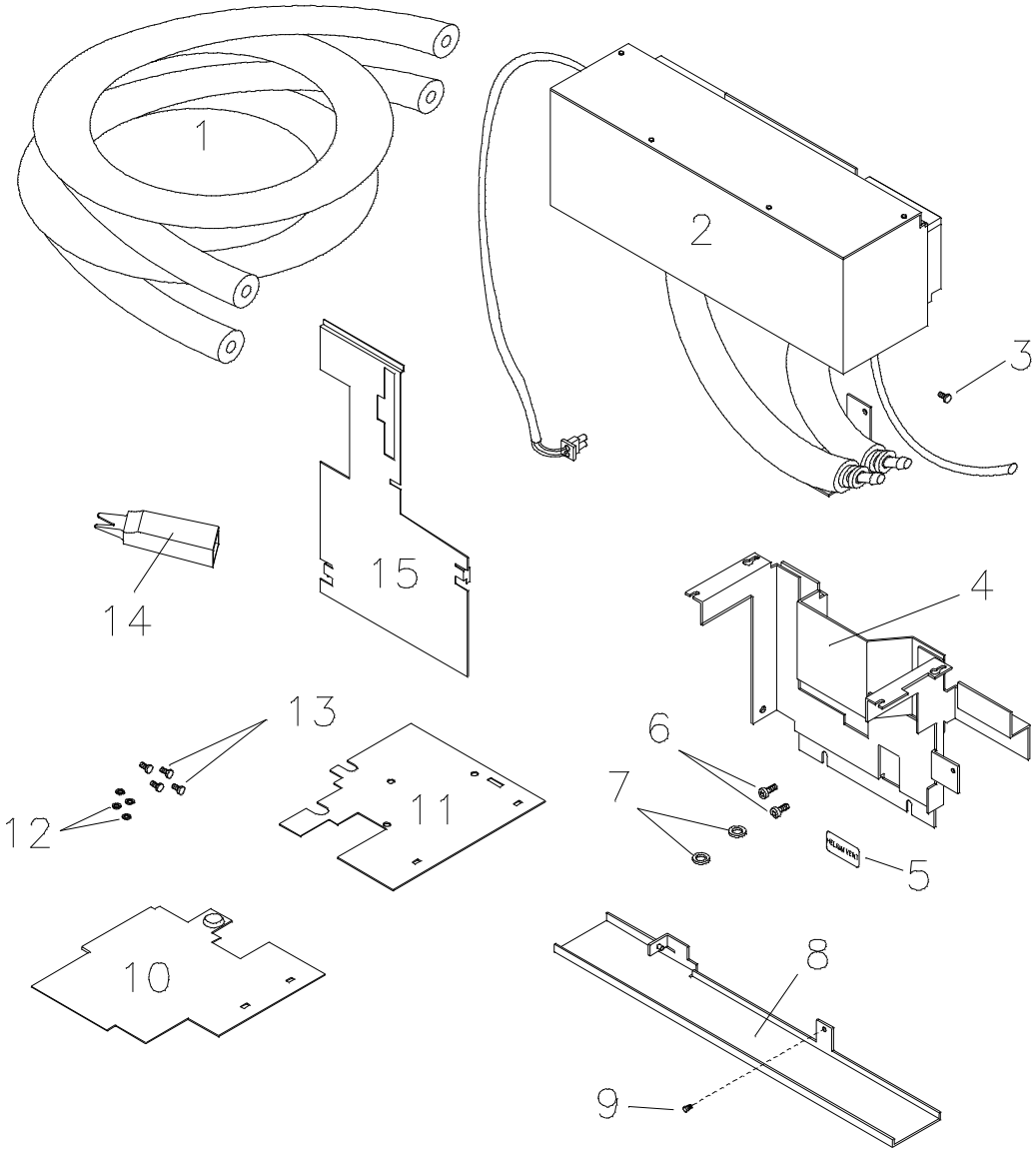

Figure 197 **Automatic Sampler (TCAS) Parts**

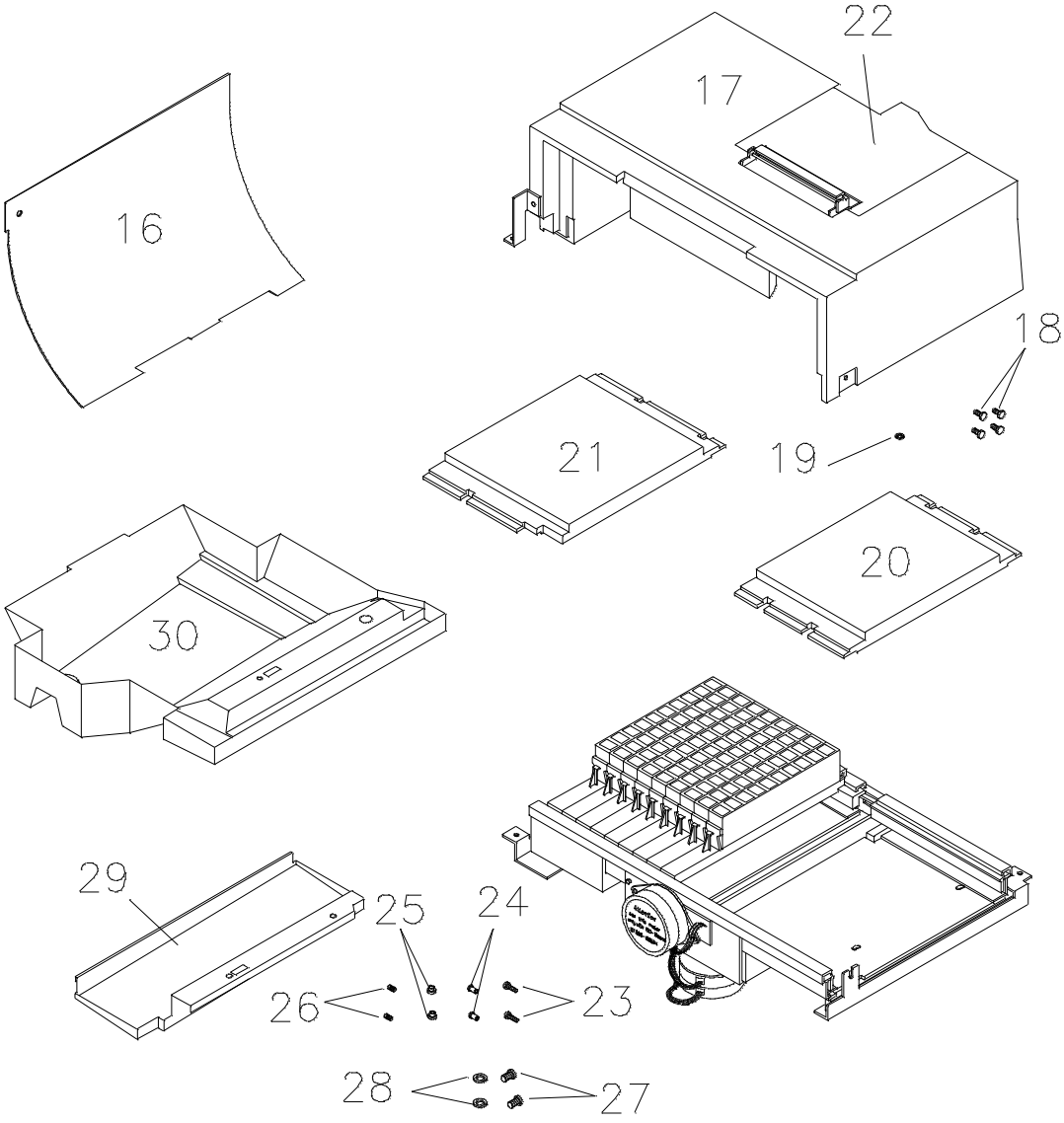

Column Compartment (CC)

Table 82 **Column Compartment Parts**

Item	Description	Part number
2	Screw M3 x 0.5, 6 mm lg	0515-0886
3	Angle	01090-00511
4	ZDV Fitting	0100-0900
6	Oven Insulation	4040-2023
	Insulation Insert (to plug hole for CS)	4040-2026
7	Fan Assembly	3160-0402
8	Screw TPG 6-32	0624-0244
9	Fan Insulation	4040-2027
10	Cover	01090-04115
11	Screw M3 x 0.5, 6 mm lg	0515-0886
12	OVI Board	01090-66508
13	Oven Control Cable	01090-61610
14	Oven Cover Panel	01090-04504
15	Screw M3 x 0.5, 6 mm lg	0515-0886
16	Heater Assembly	01090-61105
17	Waste Tray	4040-2024
18	Flexible Tubing 6 mm o.d.	0890-1486
19	Screen	01090-04601
20	Screw TPG 6-32	0624-0244
21	Column Holder	01090-42302
22	ZDV Fitting	0100-0900
23	Clamp	01090-21202

Table 82 **Column Compartment Parts**

Item	Description	Part number
24	Screw M4 x 0.7, 4 mm lg	0515-1229
	Door Assembly Series 2	01090-60304
	Hinge	3110-0162
	Screw M2.5 x 0.45, 6 mm lg for Hinge	0515-1121
	Catch Magnetic	1390-0680
	Screw M3 x 0.5, 6 mm lg for catch magnetic	0515-0890
	Temperature Sensor PT100	01090-61604
	Thermal compound	6040-0454
	Cooling Capillaries (opt)	01090-87612
	Column Connector 0.12 mm i.d., 105 mm lg	01090-87611

Figure 198 **Column Compartment Parts**

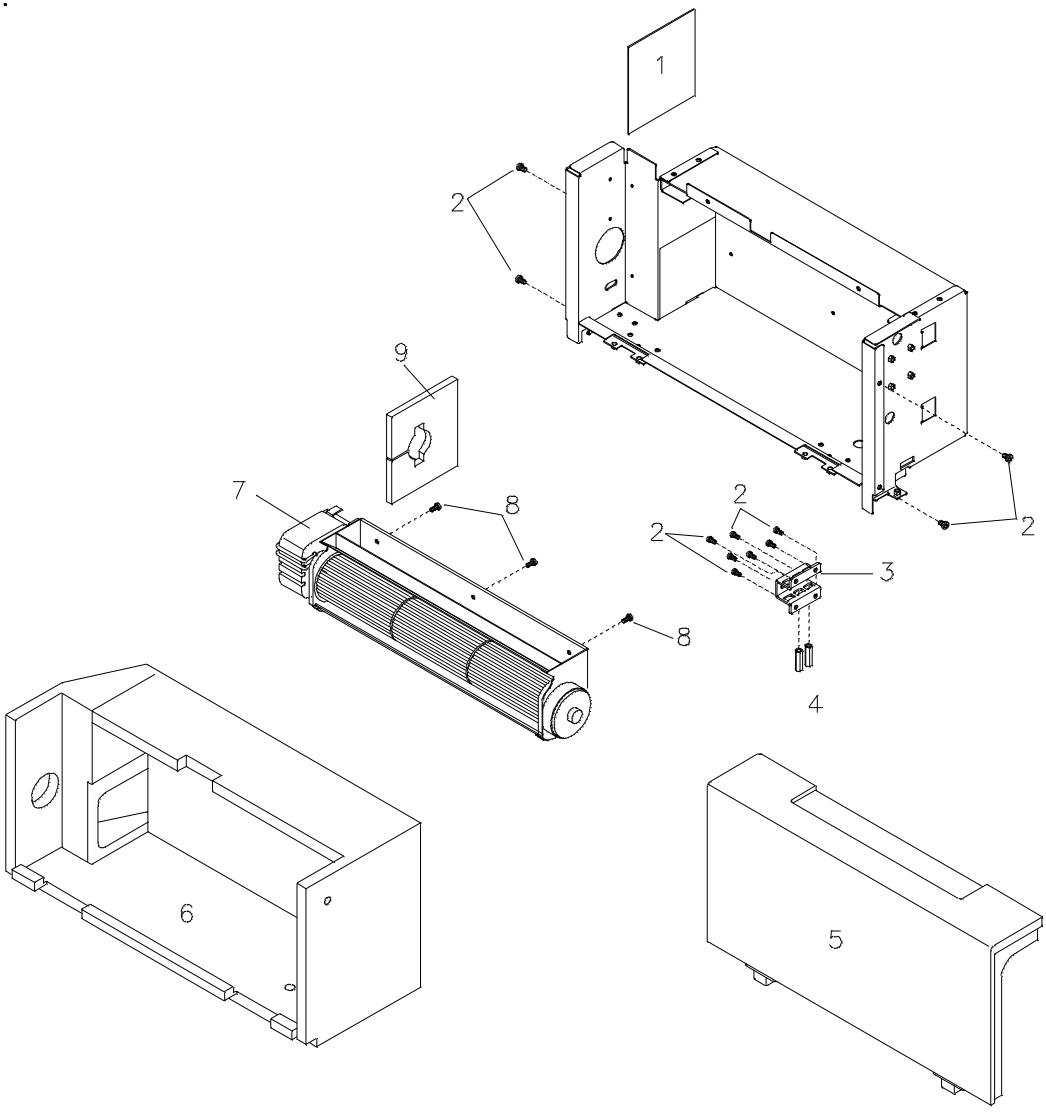

Figure 199 **Column Compartment Parts**

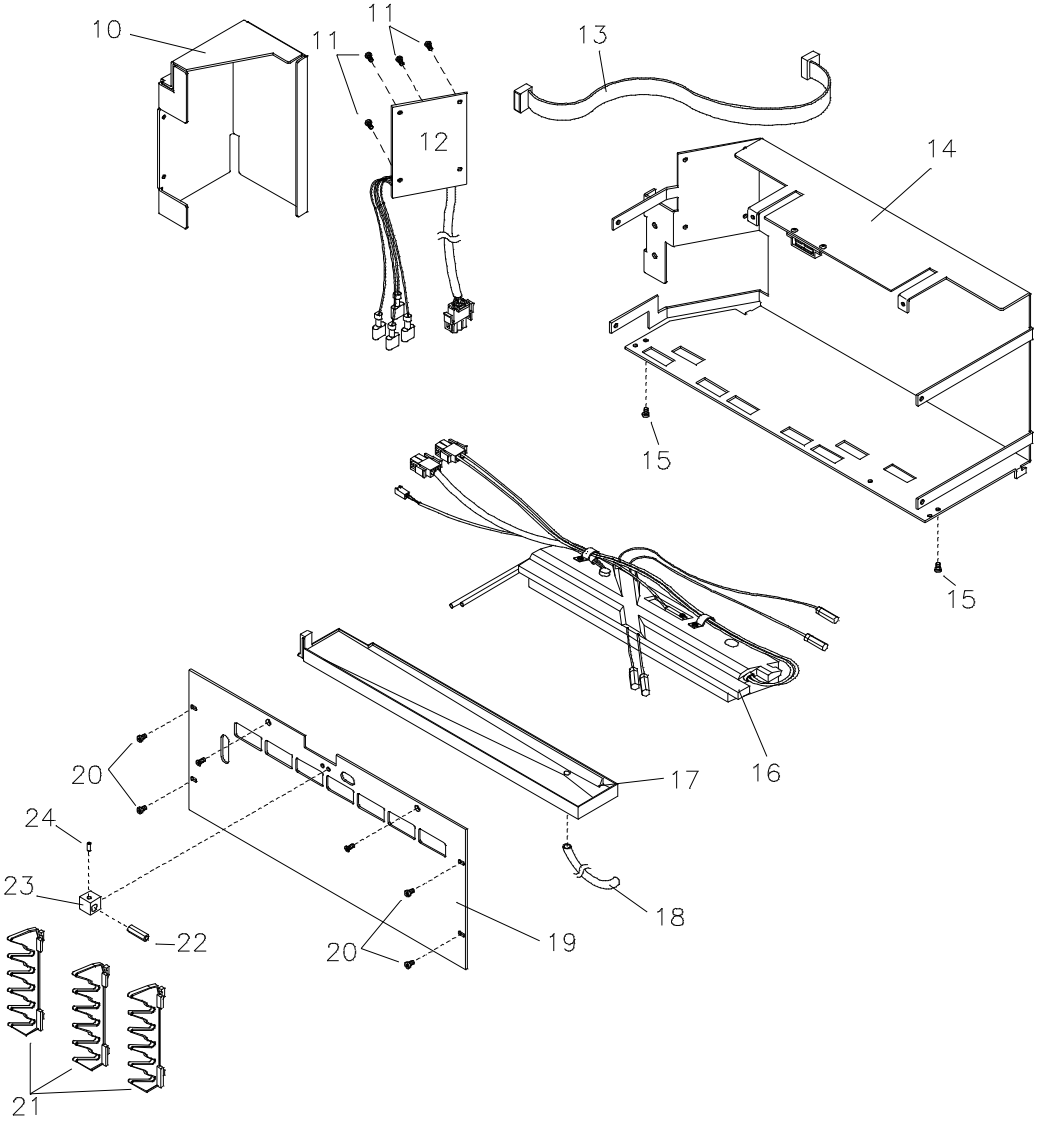

Column Switching Valve

Table 83 **Column Switching Valve Parts**

Item	Description	Part number
	Switching Valve	79826-60001
	Valve-solenoid	0101-0559
	Gease (see page 285)	6040-0388 or 6040-0397
	Capillary Kit (0.12 mm i.d.), contains	79826-68701
	Zero dead volume fitting	0100-0900
	Column Adapter 0.12 mm i.d., 280 mm lg	01090-87610
	Connection Capillary 0.12 mm i.d., 80 mm lg, QTY=3	79826-87601
	Connection Capillary 0.12 mm i.d., 280 mm lg, QTY=3	79826-87602
	Connection Capillary 0.12 mm i.d., 400 mm lg, QTY=1	79826-87605

Filter Photometric Detector (FPD)

Table 84 **FPD Module Mainframe Parts**

Item	Description	Part number
1	Board Clamp	79880-01202
2	FDP Board	79881-66503/-69503
3	ADA Board	79881-66502/-69502
4	ADA Cable Assembly	79881-61602
5	Grommet	0400-0011
6	Heat Sink	01090-21102
7	Rear Panel FPD	01090-00210
8	Air Filter	01090-07101
	Fuse F31 on DPS, 8 A	2110-0342
	Fuse F33 on DPS, 1 A	2110-0001
9	Capacitor DPS Assembly (CCO)	79880-66510
	Capacitor 2000 µF/200V	0180-0653
	Resistor 15 K/2 W 5%	0698-3647
10	FMB Board	79881-66501
11	DPS Board	79883-66501
12	Cover DPS Board	79880-04103
	Guide PC	79881-03101
	Guide PC	0403-0302
	Guide PC	0403-0102
	Screw M3 x 0.5, 8 mm lg for Housing	0515-0897
	Screw M3 x 0.6, 16 mm lg for Motherboard	0515-1111
	Screw M4 x 0.7, 6 mm lg for Foot Optical Unit	0515-0898

Table 84 **FPD Module Mainframe Parts**

Item	Description	Part number
	Cable FDP-CTM	01090-61613

Figure 200 **FPD Module Mainframe Parts**

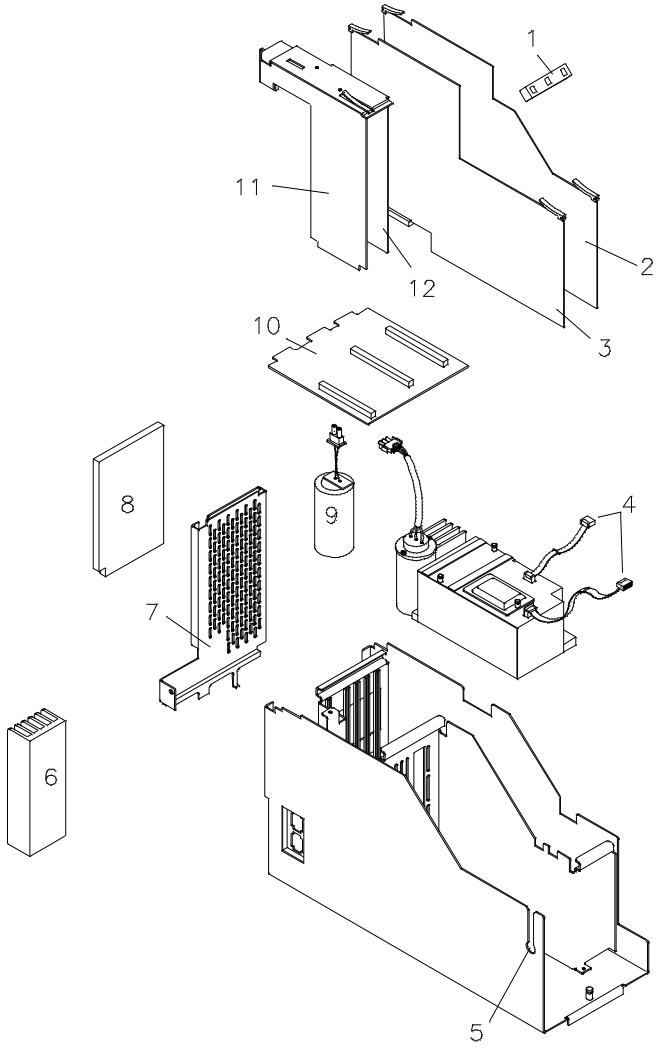

Optical Unit

Table 85 **FPD Optical Unit Parts**

Item	Description	Part number
1	Gasket Cell Cover	79881-07103
2	Screw M3 x 0.5, 6 mm lg	0515-0924
3	Optical Unit Cover	79881-04102
4	ADA Cable Assembly	79881-61602
5	Reference Diode Assembly	79881-60007
6	Lamp Assembly	79880-60002
7	Filter Cover	79881-04103
8	Screw M4 x 0.7, 8 mm lg	0515-0885
9	Optical Unit, items 4, 6 and 12 not included	79880-60004/-69004
10	Cell Assembly	79881-60002
11	Filter Wheel Motor	79881-02401
12	Filter Assembly 210 nm	79881-62761
	Filter Assembly 230 nm	79881-62762
	Filter Assembly 254 nm	79881-62763
	Filter Assembly 269 nm	79881-62769
	Filter Assembly 280 nm	79881-62764
	Filter Assembly 340 nm	79881-62765
	Filter Assembly 430 nm	79881-62766
	Filter Assembly 540 nm	79881-62767
14	Wheel Assembly	79881-62501
15	Leak Sensor	5061-3356
16	Screw M4 x 0.7, 8 mm lg	0515-0553
17	Screw M3 x 0.5, 8 mm lg	0515-0897
18	Sample Diode Assembly	79881-60006

Table 85 **FPD Optical Unit Parts**

Item	Description	Part number
	Light Isolator Fixture *	79881-20010

* This is present on newer detectors and allows operation with cell door open.

NOTE Lens and beam splitter are not field replaceable.

Figure 201 **FPD Optical Unit Parts**

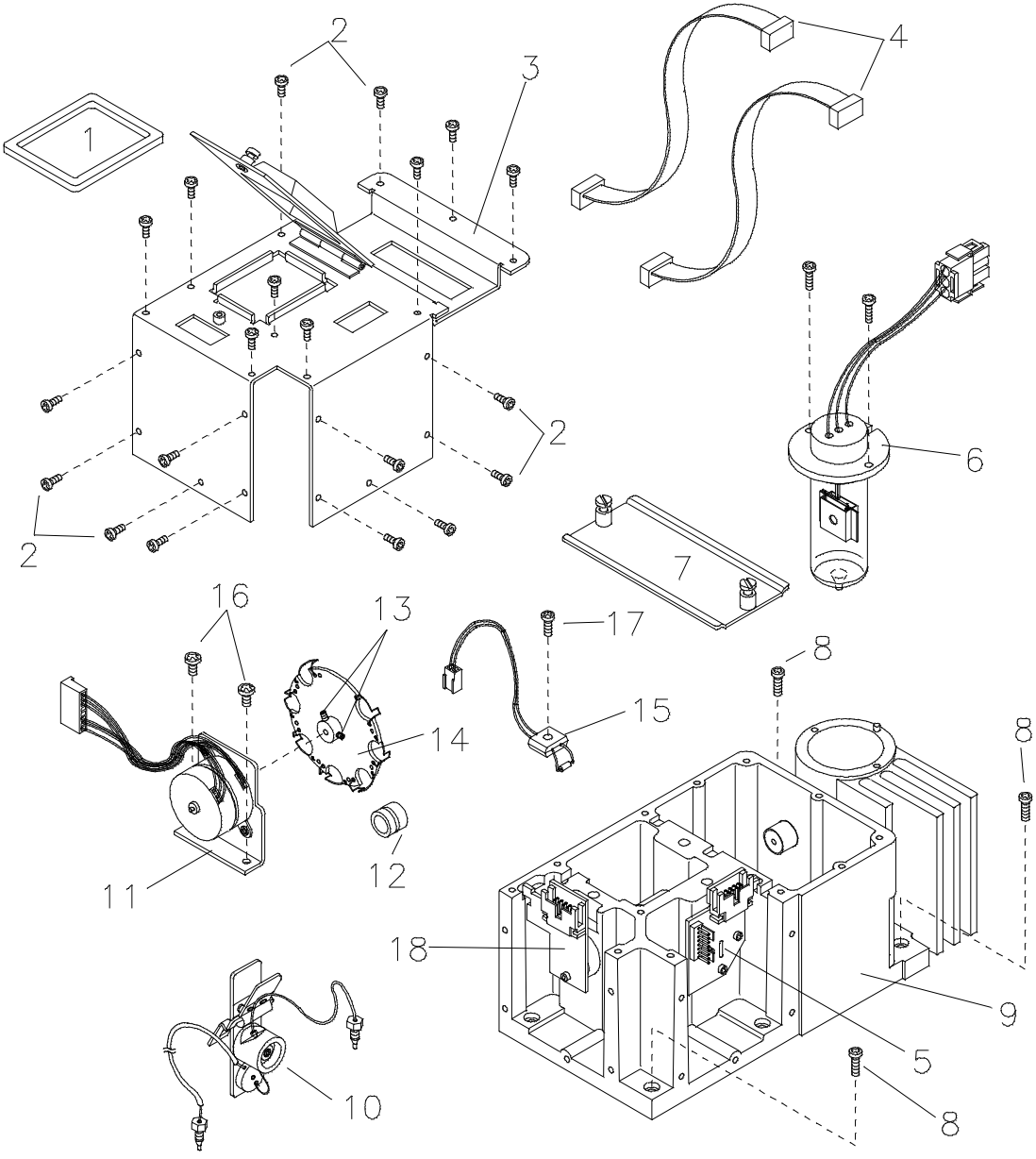

Flow Cell

Table 86 **Flow Cell Parts**

Item	Description	Part number
	Cell Assembly, includes items 1 to 11	79881-60002
1	Clamp Lever	79881-05001
2	Cell Housing	79881-25204
3	Inlet Capillary 0.12 mm i.d., see “FPD Spare Part Kit”	79881-67301
4	Outlet Capillary 0.25 mm i.d.	79881-67302
5	Cell Screw	79881-22403
6	Cell Spring, see “FPD Spare Part Kit” on page 418	79881-09103
7	Cell Window, see “FPD Spare Part Kit” on page 418	79881-28101
8	Cell Gasket 0.6, see “FPD Spare Part Kit” on page 418	79881-27101
9	Cell Gasket 1.2, see “FPD Spare Part Kit” on page 418	79881-27102
10	Screw M2.5 x 0.45, 6 mm lg for Heat exchanger	0515-0894
11	Screw Cell M2.5 x 0.45, 4 mm lg	0515-1056

NOTE Items 1, 2 and 11 can be purchased to make an FPD test cell.

Figure 202 **FPD Flow Cell Parts**

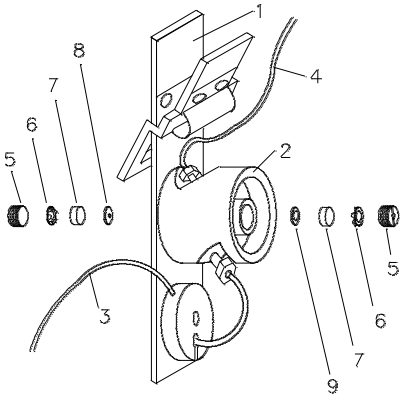

FPD Spare Part Kit

Table 87 **Flow Cell Parts**

Item	Description	Part number
	FPD Spare Part Kit	79881-68701
	Inlet Capillary 0.12 mm i.d., Qty=1	79881-67301
	Cell Spring, Qty=10	79881-09103
	Cell Window Quartz, Qty=3	79881-28101
	Cell Gasket 0.6 mm hole, Teflon black, Qty=5	79881-27101
	Cell Gasket 1.2 mm hole, Teflon black, Qty=5	79881-27102
	Tweezer, 4 3/4" long, Qty=1	8710-0007
	Wrench 4 mm lg, Qty=1	8710-1534

Cables

Signal Cables

Table 88 **Signal Cables**

Description	Part number	see
HP 3390/2/3A Integrator	01040-60100	Figure 203
HP 18652A Interface (1 V)	01040-60103	Figure 204
HP 18652A Interface (0.1 V)	01040-60104	Figure 205
General Purpose (spade lugs)	01040-60105	Figure 206
HP 3388A Integrator	01040-60106	Figure 207
HP 3394/6A Integrator	35900-60600	
HP 35900C Interface	35900-60600	

Figure 203 **Signal Cable: 01040-60100**

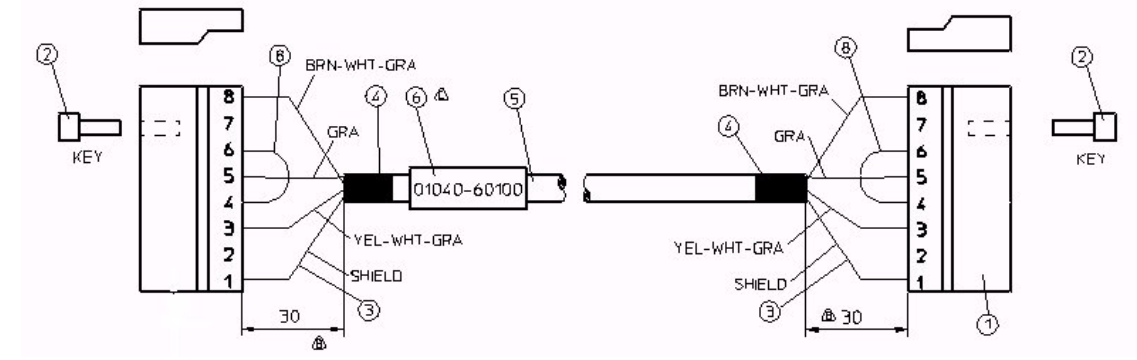

Figure 204 **Signal Cable: 01040-60103**

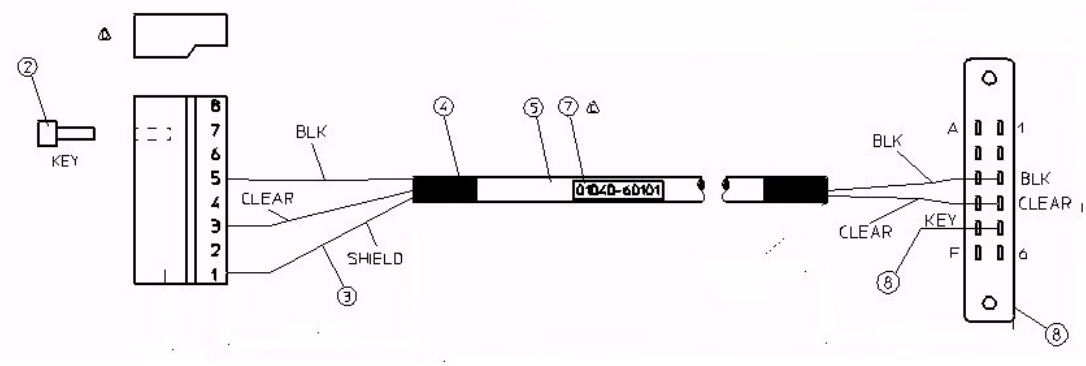

Figure 205 **Signal Cable: 01040-60104**

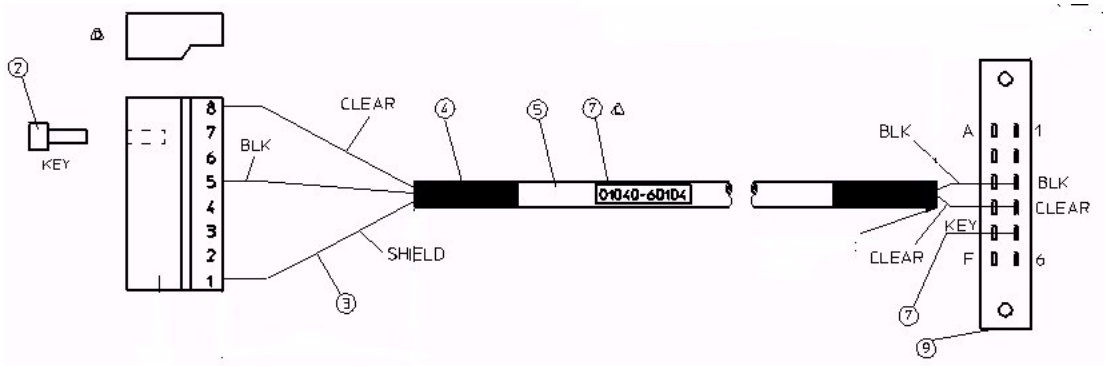

Figure 206 **Signal Cable: 01040-60105**

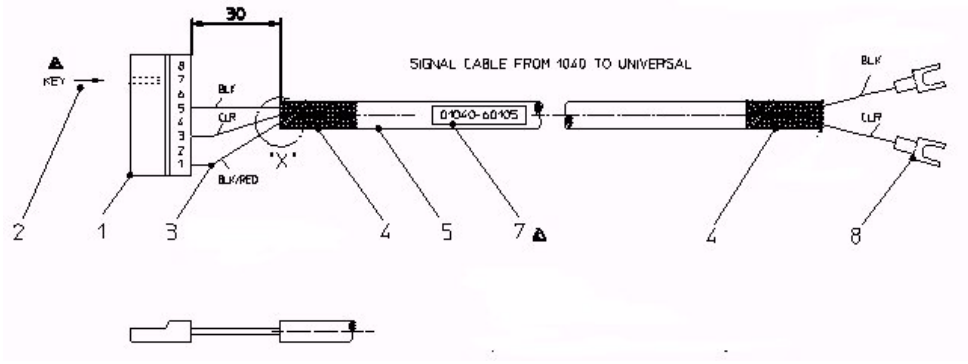

Figure 207 **Signal Cable: 01040-60106**

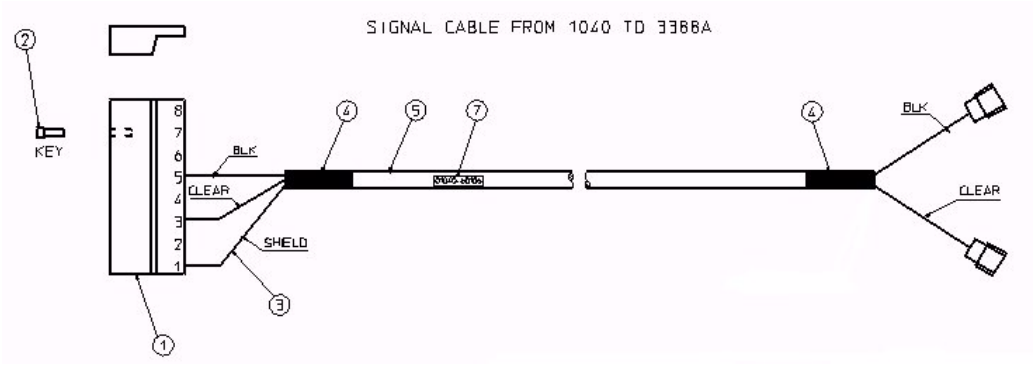

Remote Cables

Table 89 **Remote Cables (to edge connector on HP 1090)**

Description	Part number	see
General Purpose (leaf contacts)	01040-60201	Figure 208
Signal-Distribution Module	01040-60202	Figure 209
HP 3390A Integrator	01040-60203	Figure 210
HP 18652A Interface	01040-60204	Figure 211
HP 3388A Integrator	01040-60205	Figure 212
HP 3392/3A Integrator	01090-60206	Figure 213
HP 3394/6A Integrator	03394-60550	
HP 35900C Interface	35900-60710	

Figure 208 **Remote Cable: 01040-60201**

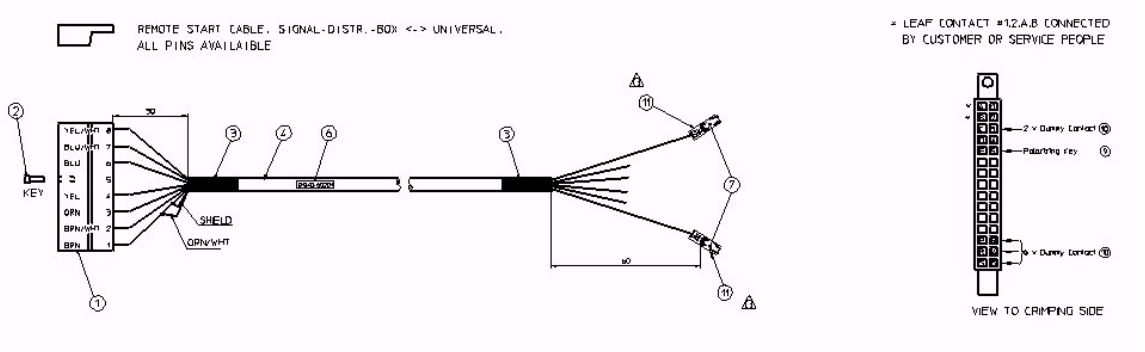

Figure 209 **Remote Cable: 01040-60202**

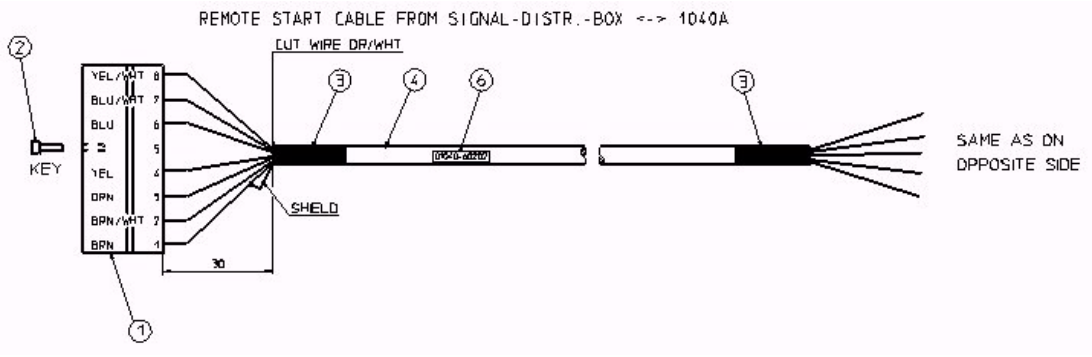

Figure 210 **Remote Cable: 01040-60203**

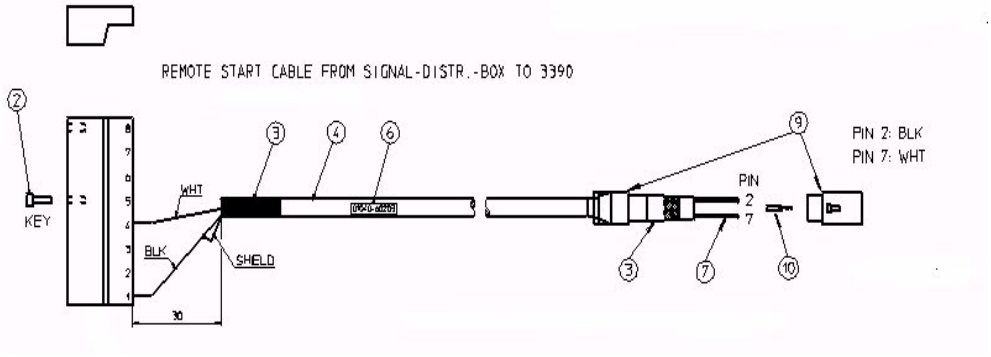

Figure 211 Remote Cable: 01040-60204

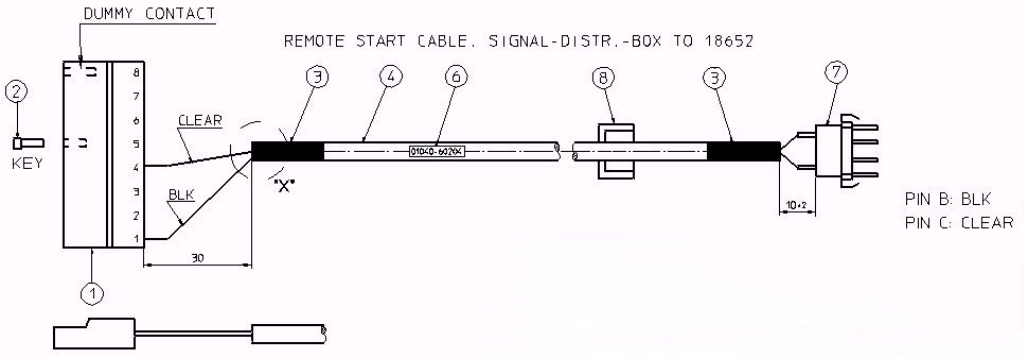

Figure 212 Remote Cable: 01040-60205

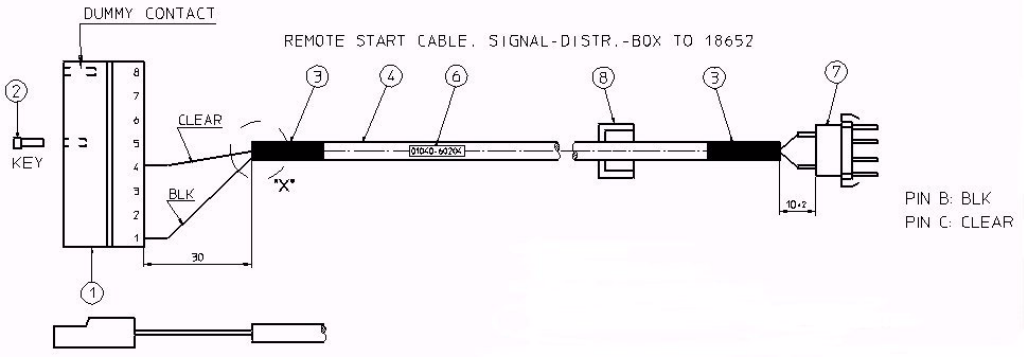

Figure 213 Remote Cable: 01090-60206

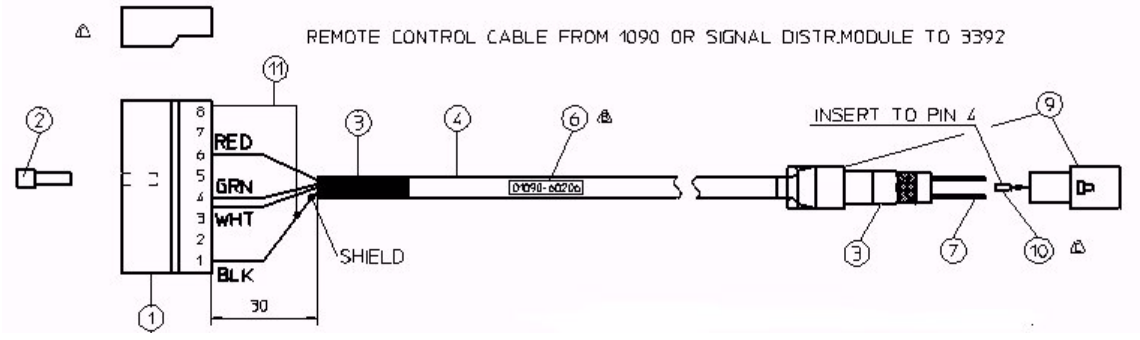

Table 90 **Remote Cables (to RCI Board: Series 2 only)**

Description	Part number	see
HP 3390A Integrator	01046-60203	Figure 214
HP 3392/3A Integrator	01046-60206	Figure 215
HP 3394A Integrator	01046-60210	Figure 216
HP 3396A Integrator	03394-60600	
HP 1046A FLD	5061-3378	
HP 35900A	5061-3378	
HP 1040 DAD	01046-60202	Figure 217
HP 1090 LC	01046-60202	Figure 217
Signal-Distribution Module	01046-60202	Figure 217
General Purpose (spade lugs)	01046-60201	Figure 218

Figure 214 **Remote Cable: 01046-60203**

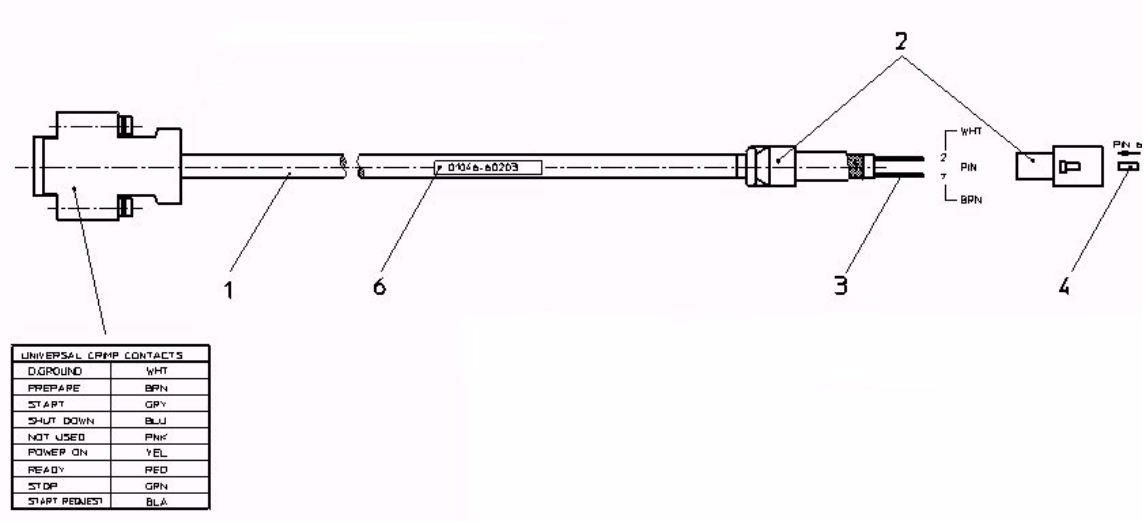

Figure 215 **Remote Cable: 01046-60206**

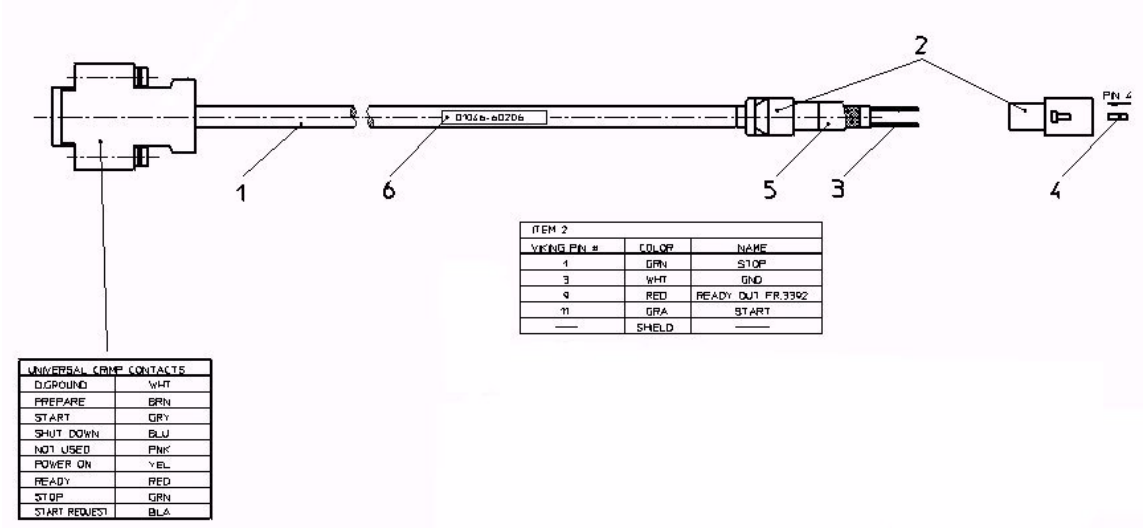

ITEM 2		
VIKING PIN #	COLOR	NAME
1	GRN	STOP
3	WHT	GND
9	RED	READY OUT FR.3392
11	GRA	START
—	SHELD	—

UNIVERSAL CRIMP CONTACTS	
GROUND	WHT
PREPARE	BRN
START	GRY
SHUT DOWN	BLU
NOT USED	PNK
POWER ON	YEL
READY	RED
STOP	GRN
START REQUEST	BLA

Figure 216 **Remote Cable: 01046-60210**

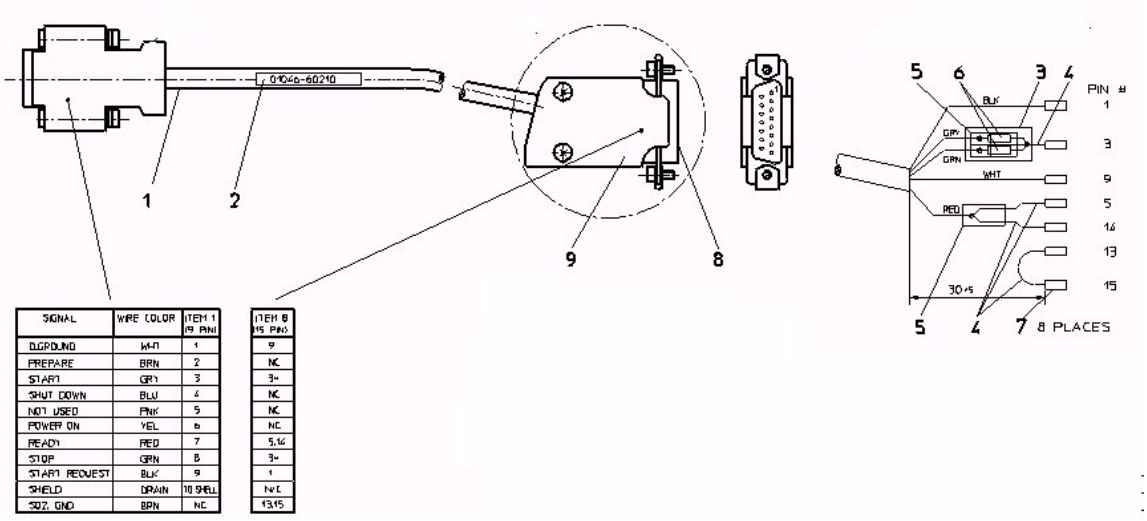

SIGNAL	WIRE COLOR	ITEM 1 (9 PIN)
GROUND	WHT	1
PREPARE	BRN	2
START	GRY	3
SHUT DOWN	BLU	4
NOT USED	PNK	5
POWER ON	YEL	6
READY	RED	7
STOP	GRN	8
START REQUEST	BLK	9
SHIELD	DRAIN	10 SHELL
SIG. GND	BRN	NC

ITEM 8 (15 PIN)
9
NC
3+
NC
NC
NC
5,14
3+
1
NC
13,15

Figure 217 **Remote Cable: 01046-60202**

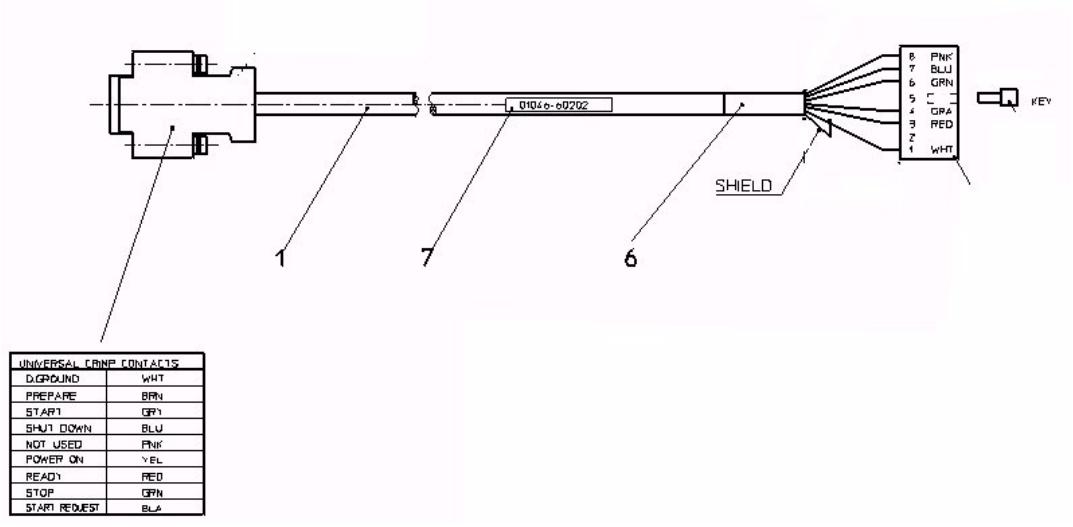

Figure 218 **Remote Cable: 01046-60201**

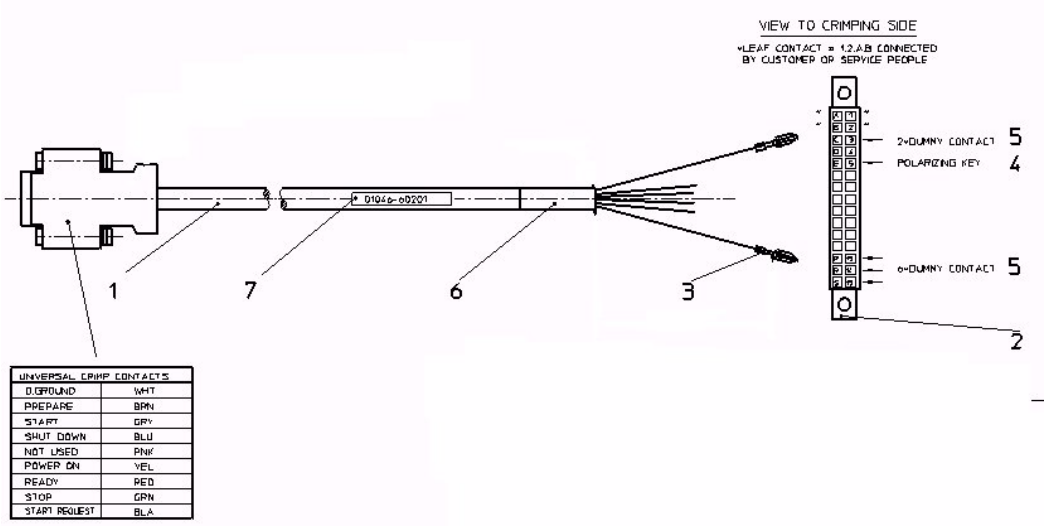

BCD Cables

Table 91 **BCD Cables**

Description	Part number	see
HP 3350A Series ECM module	01090-60311	Figure 219
HP 3396A Integrator	03396-60580	
General Purpose	01090-60312	Figure 220

Figure 219 **BCD Cable: 01090-60311**

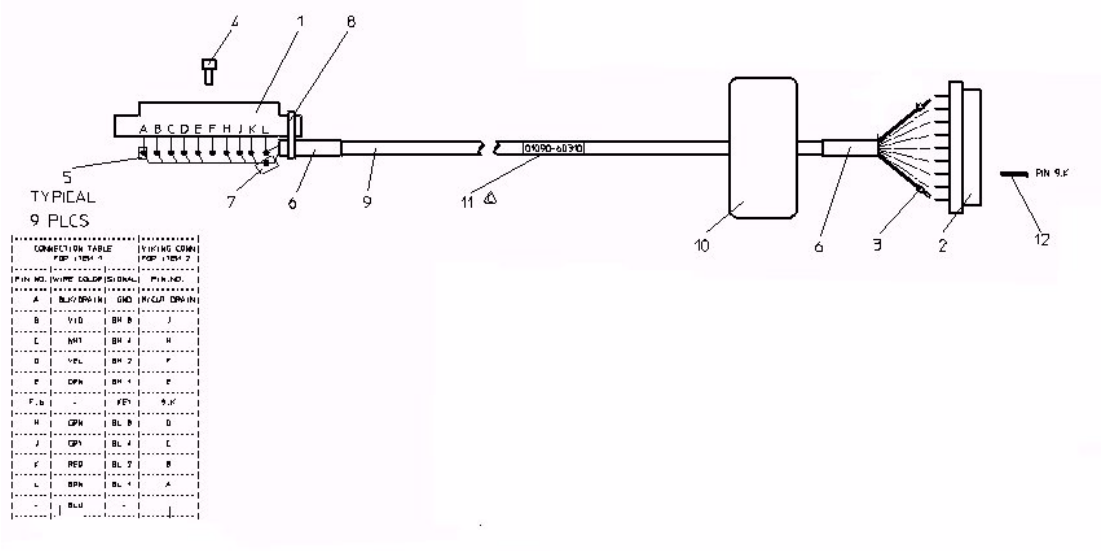

Figure 220 **BCD Cable: 01040-60312**

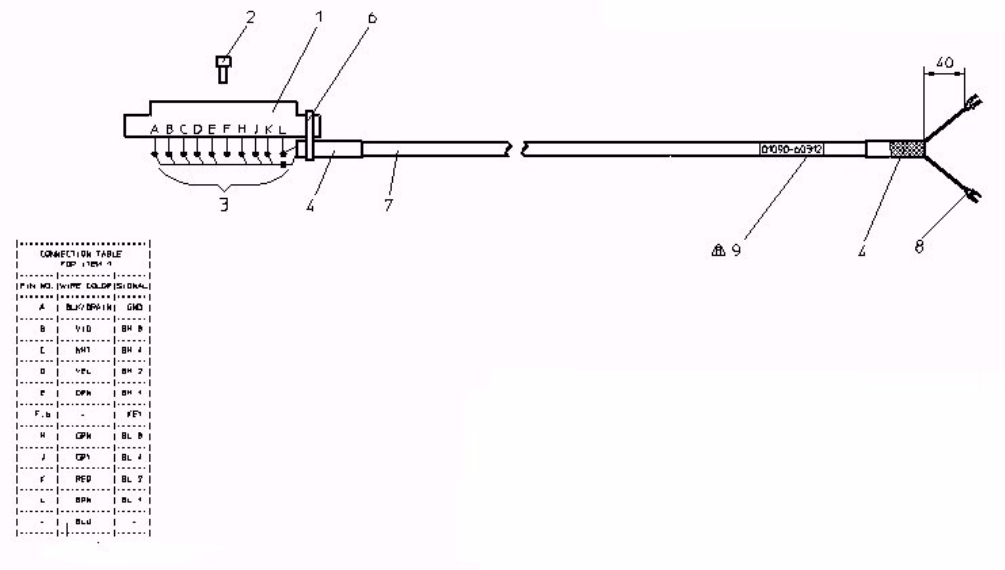

A
abbreviations, 24
AC- fan parts, 344
actual position counter, 153
actuator air solenoids, 224
adders, 154
AI
  actuator air solenoids, 224
  electronics, 226
  mechanics, 223
  overview, 216
alignment of filter wheel (FPD), 326
analog cables, 419
APDS controller, 221
AS
  parts, 400
autoinjector mechanics, 223
autoinjector melectronics, 226
automated pre-column derivatization system, 221
automatic sampler parts, 400

B
BCD cables, 427
beamsplitter (FPD), 296, 303
boards
  compatibility of system, 68
  CTL, 48
  CTM, 59
  DKC, 74
  ECI, 62
  FMB (FPD), 323
  IBU, 56
  MCD, 152
  MCO, 48
  MEM, 49
  RCI, 65
booster pump
  flow reduction, 176
  no compression, 176
  replacement, 176
booster pump procedures, 176
bottle holder parts, 347

C
cables, 419
cell spare kit (FPD), 418
clamp assembly, 142
colors, 350
column backflushing mode, 220
column switching
  parts, 411
column switching mode, 220
column switching parts, 411
column switching valve, 219
command position register, 153
common abbreviations, 24
commutator, 154
compatibility of system boards, 68
Controller Motherboard (CTM), 59
CTL board, 48
CTM revisions, 61

D
DC-fan parts, 346
description
  of high pressure pump, 140
  of leak detection system, 133
  of low pressure compliance, 138
  of pumping system, 128
deuterium lamp
  FPD, 295
deuterium lamp (FPD), 302
diagnostic cable SDS, 182
diagnostics
  FPD, 328
diagnostics and troubleshooting (FPD), 328
diode array detector (DAD) leak sensor, 174
Display and Keyboard Controller (DKC), 74
dual bridge amplifier, 157

E
ECI board revisions, 62
electrical control, 148
error connector, 67
error messages
  FPD, 328
External Contacts Interface Board (ECI), 62

F
filter detector motherboard (FMB), 323
filter photometric detector (FPD) leak sensor, 174
filter photometric detector parts, 412
filter wheel (FPD), 296
first lens system (FPD), 296
first serial number
  series II, 35, 333
flow cell (FPD), 296
flow cell parts (FPD), 417
flow reduction, 176
FPD
  alignment of filter wheel, 326
  beamsplitter, 296, 303
  cell spare part kit, 418
  deuterium lamp, 295, 302
  diagnostics and troubleshooting, 328
  error messages, 328
  filter wheel, 296
  first lens system, 296
  flow cell, 296
  flow cell parts, 417
  FMB, 323
  lens system, 303
  measurement of lamp parameters, 329
  mechanics, 301
  operation, 297
  optical system, 295
  optical unit, 301
  optical unit parts, 414
  overview, 294
  parts, 412
  procedures, 326
  replacing the photodiodes, 326
  second lens system, 296
  signal problems (noisy/dead), 331
  turn-on and calibration, 297
functionality
  mainframe, 27
fuses, 349

H
high pressure damper, 147
high pressure pump, 140
HP 1090 series II, 35
HP-IB Interface Board (IBU), 56

I
IBU board revisions, 56
injection sequence, 218
injection steps, 218
injector leak sensor, 173
instrument identification, 23

K
KALREZ (TM), 136

L
lamp lifetime, 302
leak detection circuits, 171
leak detection system, 133
leak sensor
  DAD, 174
  FPD, 174
  injector, 173
  SDS, 173
lens system (FPD), 303
low pressure compliance, 138
LPC, 138
LUSI
  to GPIB upgrade parts, 356

M
mainframe
  base parts, 337
  functionality, 27
  overview, 26
  top cover parts, 334
mainframe - inner mainframe parts, 340
manual structure, 20
manuals
  related documents, 21
  structure, 20
MCGV, 191
MCO board revisions, 48
measurement of lamp parameters (FPD), 329
mechanics (FPD), 301
MEM firmware, 49
membrane replacement, 176
Metering Channel Driver Board (MCD), 152
multi-channel gradient valve (MCGV), 191

N
no compression
  on booster pump, 176
notes, cautions, and warnings, 20

O
operation (FPD), 297
optical system
  FPD, 295
optical unit (FPD), 301
optical unit parts (FPD), 414
override valve, 146
override valve adjustment, 178
overview
  autoinjector, 216
  FPD, 294
  mainframe, 26
  PV5, 190

P
parts
  AC-fan, 344
  analog cables, 419
  AS, 400
  base mainframe, 337
  BCD cables, 427
  bottle holder assembly, 347
  cables, 419
  colors, 350
  column switching, 411
  DC-fan, 346
  flow cell (FPD), 417
  flow cell kit (FPD), 418
  FPD, 412
  fuses, 349
  inner mainframe, 340
  LUSI to GPIB upgrade, 356
  optical unit FPD, 414
  remote cables, 421
  signal cables, 419
  solvent flow path, 370
  system boards/cables, 351
  TCAS, 403
  top cover mainframe, 334
piston seal, 142
pre-column derivatization, 221
preparation of solvents, 131
procedures
  alignment of filter wheel (FPD), 326
  booster pump, 176
  booster pump replacement, 176
  FPD, 326
  membrane replacement, 176
  override valve adjustment, 178
  replacing the photodiodes (FPD), 326
PTC, 171
  working conditiones, 171
pulse width modulator, 154
pumping system, 128
PV5
  overview, 190

Q
quadrature decoder, 153

R
related documentation, 21
remote
  cables, 421
  control, 65
  Ready (I/O), 66
  Shutdown (I/O), 66
  signals, 65
  Start (I/O), 65
  Start Request (Input only), 67
  Stop (I/O), 66
Remote Control Interface (RCI), 65
repair policy, 23
replacing
  alignment of filter wheel (FPD), 326
  the photodiodes (FPD), 326

S
SDS
  diagnostic cable, 182
sds leak sensor, 173
second lens system (FPD), 296
serial number, 23
series I or series II, 21
series II
  first serial number, 35, 333
service
  documentation, 23
  notes, 23
signal
  cables, 419

signal problems (noisy/dead) (FPD), 331
solvent ball valves, 145
solvent flow path parts, 370
solvent preparation system, 131
status control, 155
switch block, 67
system operation, 30
system parts, 351

T
TCAS
  parts, 403
temperature-controlled autosampler parts, 403
troubleshooting
  FPD, 328
turn-on and calibration (FPD), 297

U
upgrade
  LUSI to GPIB, 356

V
velocity detector, 153

Agilent Technologies

In This Book

This manual contains technical information about the Agilent HP 1090 Series L/M liquid chromatographs.

This manual is available as electronic version (Adobe Acrobat Reader file) only.

Edition: 07/2001